APPLICATIONS

- IEEE 802.15.4 systems
- ZigBee® systems
- Industrial monitoring and control
- Home and building automation
- Automatic Meter Reading
- Low-power wireless sensor networks
- Set-top boxes and remote controls
- Consumer electronics

KEY FEATURES

- State-of-the-art selectivity/co-existence
  Adjacent channel rejection: 49 dB
  Alternate channel rejection: 54 dB
- Excellent link budget (103dB)
  400 m Line-of-sight range
- Extended temp range (-40 to +125°C)
- Wide supply range: 1.8 V – 3.8 V
- Extensive IEEE 802.15.4 MAC hardware support to offload the microcontroller
- AES-128 security module
- CC2420 interface compatibility mode

Low Power

- RX (receiving frame, -50 dBm) 18.5 mA
- TX 33.6 mA @ +5 dBm
- TX 25.8 mA @ 0 dBm
- <1μA in power down

General

- Clock output for single crystal systems
- RoHS compliant 5 x 5 mm QFN28 (RHD) package

Radio

- IEEE 802.15.4 compliant DSSS baseband modem with 250 kbps data rate
- Excellent receiver sensitivity (-98 dBm)
- Programmable output power up to +5 dBm
- RF frequency range 2394-2507 MHz
- Suitable for systems targeting compliance with worldwide radio frequency regulations: ETSI EN 300 328 and EN 300 440 class 2 (Europe), FCC CFR47 Part 15 (US) and ARIB STD-T66 (Japan)

Microcontroller Support

- Digital RSSI/LQI support
- Automatic clear channel assessment for CSMA/CA
- Automatic CRC
- 768 bytes RAM for flexible buffering and security processing
- Fully supported MAC security
- 4 wire SPI
- 6 configurable IO pins
- Interrupt generator
- Frame filtering and processing engine
- Random number generator

Development Tools

- Reference design
- IEEE 802.15.4 MAC software
- ZigBee® stack software
- Fully equipped development kit
- Packet sniffer support in hardware

DESCRIPTION

The CC2520 is TI's second generation ZigBee® / IEEE 802.15.4 RF transceiver for the 2.4 GHz unlicensed ISM band. This chip enables industrial grade applications by offering state-of-the-art selectivity/co-existence, excellent link budget, operation up to 125°C and low voltage operation.

In addition, the CC2520 provides extensive hardware support for frame handling, data buffering, burst transmissions, data encryption, data authentication, clear channel assessment, link quality indication and frame timing information. These features reduce the load on the host controller.

In a typical system, the CC2520 will be used together with a microcontroller and a few additional passive components.

QFN28 (RHD) PACKAGE TOP VIEW

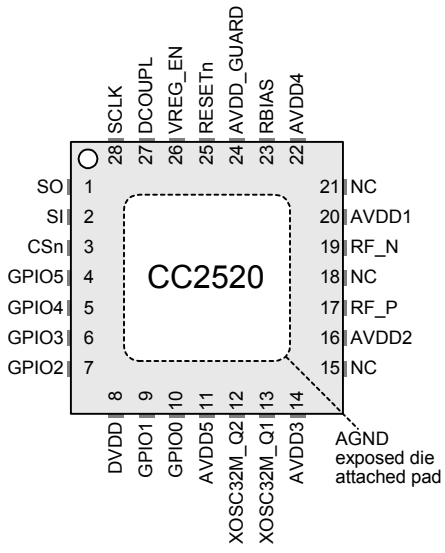

Please be aware that an important notice concerning availability, standard warranty, and use in critical applications of Texas Instruments semiconductor products and disclaimers threto appear at the end of this datasheet.
ZigBee® is a registered trademark owned by ZigBee Alliance, Inc.

Copyright © 2007, Texas Instruments Incorporated

TABLE OF CONTENTS

1 Abbreviations 5
2 References 7
3 Features 8
4 Absolute Maximum Ratings 10
5 Electrical Characteristics 11
5.1 Recommended Operating Conditions 11
5.2 DC Characteristics 11
5.3 Wake-Up and Timing 11
5.4 Current Consumptions 11
5.5 Receive Parameters 12
5.6 Frequency Synthesizer Parameters 12
5.6.1 Transmit Parameters 12
5.7 RSSI/CCA Parameters 13
5.8 FREQEST Parameters 13
5.9 Typical Performance Curves 14
5.10 Low-Current Mode RX 19
5.10.1 Low-Current RX Mode Parameters 19
5.11 Optional Temperature Compensation of TX 20
5.11.1 Using the Temperature Sensor 21
6 Crystal Specific Parameters 22
6.1 Crystal Requirements 22
6.2 On-chip Crystal Frequency Tuning 22
7 Pinout 23
8 Functional Introduction 25
8.1 Integrated 2.4 GHz IEEE 802.15.4 Compliant Radio 25
8.2 Comparison to CC2420 25
8.3 Block Diagram 26
9 Application Circuit 29
9.1 Input / Output Matching 29
9.2 Bias Resistor 30
9.3 Crystal 30
9.4 Digital Voltage Regulator 30
9.5 Power Supply Decoupling and Filtering 30
9.6 Board Layout Guidelines 30
9.7 Antenna Considerations 31
9.8 Choosing the Most Suitable Interconnection with a Microcontroller 31
9.9 Interfacing CC2520 and MSP430F2618 31
10 Serial Peripheral Interface (SPI) 33
10.1 CSn 33
10.2 SCLK 33
10.3 SI 33
10.4 SO 34
10.5 SPI Timing Requirements 34
11 GPIO 35
11.1 Reset Configuration of GPIO Pins 35
11.2 GPIO as Input 35
11.3 GPIO as Output 36
11.4 Switching Direction on GPIO 36
11.5 GPIO Configuration 36
12 Power Modes 40
12.1 Switching Between Power Modes 40
12.2 Power Up Sequence Using RESETn (recommended) 41

12.3 Power Up With SRES 41
13 Instruction Set 43
13.1 Definitions 43
13.2 Instruction Descriptions 43
13.3 Instruction Set Summary 51
13.4 Status Byte 53
13.5 Command Strobes 53
13.6 Command Strobe Buffer 53
14 Exceptions 55
14.1 Exceptions on GPIO Pins 56
14.2 Predefined Exception Channels 56
14.3 Binding Exceptions to Instructions (command strobes) 57
15 Memory Map 59
15.1 FREG 60
15.2 SREG 60
15.3 TX FIFO 60
15.4 RX FIFO 60
15.5 MEM 60
15.6 Frame Filtering and Source Matching Memory Map 60
16 Frequency and Channel Programming 62
17 IEEE 802.15.4-2006 Modulation Format 63
18 IEEE 802.15.4-2006 Frame Format 65
18.1 PHY Layer 65
18.2 MAC Layer 65
19 Transmit Mode 67
19.1 TX Control 67
19.2 TX State Timing 67
19.3 TX FIFO Access 67
19.3.1 Retransmission 68
19.3.2 Error Conditions 68
19.4 TX Flow Diagram 69
19.5 Frame Processing 70
19.5.1 Synchronization Header 70
19.5.2 Frame Length Field 70
19.5.3 Frame Check Sequence 70
19.6 Exceptions 71
19.7 Clear Channel Assessment 71
19.8 Output Power Programming 71
19.9 Tips And Tricks 72
20 Receive Mode 73
20.1 RX Control 73
20.2 RX State Timing 73
20.3 Frame Processing 73
20.3.1 Synchronization Header And Frame Length Fields 74
20.3.2 Frame Filtering 74
20.3.3 Source Address Matching 77
20.3.4 Frame Check Sequence 80
20.3.5 Acknowledgement Transmission 81
20.4 RX FIFO Access 82
20.4.1 Using the FIFO and FIFOP Signals 82
20.4.2 Error Conditions 83
20.5 RSSI 83
20.6 Link Quality Indication 84

21 Radio Control State Machine 85
22 Crystal Oscillator 87
23 External Clock Output 88
24 Random Number Generation 89
25 Memory Management Instructions 91
25.1 RXBUFMOV 92
25.2 TXBUFCP 92
25.3 MEMCP 92
25.4 MEMCPR 92
25.5 MEMXCP 92
26 Security Instructions 93
26.1 Decoding of the Flags Field in CC2520 93
26.2 INC 94
26.3 ECB 94
26.4 ECBO 95
26.5 ECBX 95
26.6 CTR / UCTR 96
26.7 CBC-MAC 97
26.8 CCM / UCCM 97
26.8.1 Inputs to the CCM and UCCM Instructions 97
26.9 Examples from IEEE802.15.4-2006 98
26.9.1 Authentication Only Using CCM* 99
26.9.2 Encryption Only Using CCM* 99
26.9.3 Combination of Encryption and Authentication Using CCM* 100
27 Packet Sniffing 101
28 Registers 102
28.1 Register Settings Update 103
28.2 Register Access Modes 103
28.3 Register Descriptions 105
29 Datasheet Revision History 126
30 Packaging Information 127
30.1 Mechanical Data 128

1 Abbreviations

AAF	Anti Aliasing Filter
ACK	Acknowledge
ADC	Analog to Digital Converter
ADI	Analog-Digital Interface
AES	Advanced Encryption Standard
AGC	Automatic Gain Control
AM	Active Mode
ARIB	Association of Radio Industries and Businesses
BER	Bit Error Rate
BIST	Built In Self Test
CBC-MAC	Cipher Block Chaining Message Authentication Code
CCA	Clear Channel Assessment
CCM	Counter mode + CBC-MAC
CDM	Charged Device Model
CFR	Code of Federal Regulations
CHP	Charge Pump
CMOS	Complementary Metal Oxide Semiconductor
CRC	Cyclic Redundancy Check
CSMA-CA	Carrier Sense Multiple Access with Collision Avoidance
CTR	Counter mode (encryption)
CW	Continuous Wave
DAC	Digital to Analog Converter
DC	Direct Current
DPU	Data Processing Unit
DSSS	Direct Sequence Spread Spectrum
ECB	Electronic Code Book (mode of AES operation)
ESD	Electro Static Discharge
ESR	Equivalent Series Resistance
ETSI	European Telecommunications Standards Institute
EU	European Union
EVM	Error Vector Magnitude
FCC	Federal Communications Commission
FCF	Frame Control Field
FCS	Frame Check Sequence
FFCTRL	FIFO and Frame Control
FIFO	First In First Out
FS	Frequency Synthesizer
FSM	Finite State Machine
GPIO	General Purpose Input/Output
HBM	Human Body Model
HSSD	High Speed Serial Debug
I/O	Input / Output
I/Q	In-phase / Quadrature-phase
IEEE	Institute of Electrical and Electronics Engineers
IF	Intermediate Frequency
ISM	Industrial, Scientific and Medical
ITU-T	International Telecommunication Union – Telecommunication Standardization Sector
kbps	kilo bits per second
LB	Loop Back
LF	Loop Filter
LNA	Low-Noise Amplifier
LO	Local Oscillator
LPF	Low Pass Filter
LPM	Low-Power Mode

LQI	Link Quality Indication
LSB	Least Significant Bit / Byte
LUT	Look-Up Table
MAC	Medium Access Control
MCU	Micro Controller Unit
MFR	MAC Footer
MHR	MAC Header
MIC	Message Integrity Code
MISO	Master In Slave Out
MM	Machine Model
MOSI	Master Out Slave In
MPDU	MAC Protocol Data Unit
MSB	Most significant Bit / Byte
MSDU	MAC Service Data Unit
NA	Not Available
NC	Not Connected
O-QPSK	Offset - Quadrature Phase Shift Keying
PA	Power Amplifier
PAN	Personal Area Network
PCB	Printed Circuit Board
PD	Power Down, Phase Detector
PER	Packet Error Rate
PHR	PHY Header
PHY	Physical Layer
PLL	Phase Locked Loop
PQFP	Plastic Quad FlatPack
PSDU	PHY Service Data Unit
PUE	Pull-Up Enable
QLP	Quad Leadless Package
RAM	Random Access Memory
RBW	Resolution BandWidth
RF	Radio Frequency
RHD	Not actually an acronym. This is the package name used in TI.
RISC	Reduced Instruction Set Computer
RoHS	Restriction of Hazardous Substances Directive
ROM	Read Only Memory
RSSI	Received Signal Strength Indicator
RX	Receive
SFD	Start of Frame Delimiter
SHR	Synchronization Header
SI	Serial In
SO	Serial Out
SPI	Serial Peripheral Interface
S-PQFP	Plastic Quad Flat Pack
T/R	Transmit / Receive
TBD	To Be Decided / To Be Defined
TX	Transmit
UI	User Interface
VCO	Voltage Controlled Oscillator
VGA	Variable Gain Amplifier
XOSC	Crystal Oscillator
LR	Low Rate
NaN	Not any Number

2 References

[1] IEEE std. 802.15.4 - 2003: Wireless Medium Access Control (MAC) and Physical Layer (PHY) specifications for Low Rate Wireless Personal Area Networks (LR-WPANs)
http://standards.ieee.org/getieee802/download/802.15.4-2003.pdf

[2] IEEE std. 802.15.4 - 2006: Wireless Medium Access Control (MAC) and Physical Layer (PHY) specifications for Low Rate Wireless Personal Area Networks (LR-WPANs)
http://standards.ieee.org/getieee802/download/802.15.4-2006.pdf

[3] CC2420 datasheet
http://www.ti.com/lit/pdf/swrs041

[4] NIST FIPS Pub 197: Advanced Encryption Standard (AES), Federal Information Processing Standards Publication 197, US Department of Commerce/N.I.S.T., November 26, 2001.
http://csrc.nist.gov/publications/fips/fips197/fips-197.pdf

[5] CC2520 reference designs
http://focus.ti.com/docs/prod/folders/print/cc2520.html#applicationnotes

[6] CC2520 Errata note
http://www.ti.com/lit/pdf/swrz024

[7] CC2520 Product folder
http://focus.ti.com/docs/prod/folders/print/cc2520.html

[8] NIST software package for randomness testing:
http://csrc.nist.gov/rng/

[9] The diehard software package for randomness testing:
http://stat.fsu.edu/~geo/diehard.html

[10] MSP430F2618 Product folder
http://focus.ti.com/docs/prod/folders/print/msp430f2618.html

[11] 2.4 GHz Inverted F Antenna
http://www.ti.com/lit/pdf/swru120

[12] Antenna selection guide
http://www.ti.com/lit/pdf/swra161

3 Features

2394-2507MHz transceiver

- DSSS transceiver
- 250kbps data rate, 2 MChip/s chip rate
- O-QPSK with half sine pulse shaping modulation
- Very low current consumption
  RX (receiving frame, -50 dBm): 18.5 mA
  RX (waiting for frame): 22.3 mA
  TX (+5 dBm output power): 33.6 mA
  TX (0 dBm output power): 25.8 mA
- Three flexible power modes for reduced power consumption
- Low power fully static CMOS design
- Very good sensitivity (-98dBm)
- High adjacent channel rejection (49 dB)
- High alternate channel rejection (54 dB)
- On chip VCO, LNA, PA and filters.
- Low supply voltage (1.8 - 3.8 V)
- Programmable output power up to +5 dBm
- I/Q direct conversion transceiver

Small Size

- QFN 28 (RHD) package, 5 x 5 mm
- Very few external components
  - minimized number of passives
  - Only reference crystal needed
- Clock output for other ICs to limit the number of crystals needed in a system
- No external filters needed.

Easy and Flexible User Interface

- 4-wire SPI
- Serial clock up to 8 MHz
- 6 GPIO pins with full flexibility
- Interrupt generator
- Full control of automatic responses to different events
- Embedded packet sniffer mode
- CC2420 compatibility mode

Data Processing Unit For Advanced Data Handling

- Spacious (768 byte) on-chip RAM allows powerful on-chip frame processing
- 128 byte transmit data FIFO
- 128 byte receive data FIFO
- Full read and write access to RAM
- 128 bit AES

IEEE 802.15.4 MAC Hardware Support

- Automatic preamble generator
- Synchronization word insertion and detection
- CRC-16 computation and verification over the MAC payload
- Frame filtering
- Automatic ACK and setting of the pending-bit
- Clear Channel Assessment (CCA)
- Energy detection / RSSI
- Link Quality Indication (LQI)
- Fully automatic MAC security (CTR, CBC-MAC, CCM)

Development Tools

- See product folder [7]

Suited For Use in Systems That Target Compliance to the Following Standards

- IEEE 802.15.4 PHY
- ETSI EN 300 328
- ETSI EN 300 440 class 2
- FCC CFR47 part 15
- ARIB STD-T66

4 Absolute Maximum Ratings

over operating free-air temperature range unless otherwise noted (1)

PARAMETER	LIMITS	UNIT
Supply voltage (2)	-0.3 to 3.9	V
Voltage on any digital pin	-0.3 to VDD + 0.3 (Max 3.9)	V
Voltage on 1.8 V pins	-0.3 to 2.0	V
Input RF level	+10	dBm
Storage temperature range	-50 to 150	°C
Reflow soldering temperature	260	°C
ESD HBM	800	V
ESD CDM	500	V
ESD MM	100	V

1) Stresses beyond those listed under “absolute maximum ratings” may cause permanent damage to the device. These are stress ratings only, and functional operation of the device at these or any other conditions beyond those indicated under “recommended operating conditions” is not implied. Exposure to absolute-maximum-rated conditions for extended periods may affect device reliability.
2) All voltage values are with respect to network ground terminal.

This device has limited built-in gate protection. The leads should be shorted together or the device placed in conductive foam during storage or handling to prevent electrostatic damage to the MOS gates.

5 Electrical Characteristics

Note that these characteristics are only valid when using the recommended register settings presented in section 28.1.

5.1 Recommended Operating Conditions

PARAMETER	MIN	NOM	MAX	UNIT
Operating supply voltage	1.8		3.8	V
Ambient temperature	-40		125	°C

5.2 DC Characteristics

T_A =25°C, VDD=3.0 V, f_c=2440 MHz if nothing else stated. All parameters measured on Texas Instruments' CC2520 EM 2.1 reference design with 50 Ω load.

PARAMETER	CONDITIONS	MIN	TYP	MAX	UNIT
Logic "1" input voltage	Valid for all pads (both GPIOs and fixed-input pads)			80%	of VDD
Logic "0" input voltage	Valid for all pads (both GPIOs and fixed-input pads)	30%			of VDD
Input pad hysteresis	Only for fixed-input pads like RESET_N, CSn etc		0.5		V
Logic "0" input current	Input equals 0V	-25		25	nA
Logic "1" input current	Input equals VDD	-25		25	nA

5.3 Wake-Up and Timing

T_A =25°C, VDD=3.0 V, f_c =2440 MHz if nothing else stated. All parameters measured on Texas Instruments' CC2520 EM 2.1 reference design with 50 Ω load.

PARAMETER	COMMENTS	MIN	TYP	MAX	UNIT
LPM2 → AM time	Internal regulator startup time + XOSC startup time		0.3		ms
LPM1 → AM time	XOSC startup time		0.2		ms
AM → RX time				192	µs
AM → TX time				192	µs
RX/TX turnaround time				192	µs
TX/RX turnaround time				192	µs
Radio bit rate			250		kbps
Radio chip rate			2.0		MChip/s

5.4 Current Consumptions

T_A =25°C, VDD=3.0 V, f_c =2440 MHz if nothing else stated. All parameters measured on Texas Instruments' CC2520 EM 2.1 reference design with 50 Ω load.

PARAMETER	CONDITIONS	MIN	TYP	MAX	UNIT
Receive current	Wait for sync		22.3	24.8	mA
	T_A=-40 to 125°C, VDD=1.8 to 3.8 V, f_c =2394 to 2507 MHz			26.3	mA
	Wait for sync, Low-current RX setting		18.8		mA
	Receving frame, -50 dBm input level		18.5		mA
Transmit current	0 dBm setting		25.8	28.8	mA
	+5 dBm setting		33.6	37.2	mA
	T_A=-40 to 125°C, VDD=1.8 to 3.8 V, f_c =2394 to 2507 MHz			37.5	mA
Active Mode current	XOSC on, digital regulator on.		1.6	1.9	mA
	T_A=-40 to 125°C, VDD=1.8 to 3.8 V, f_c =2394 to 2507 MHz			2.6	mA

PARAMETER	CONDITIONS	MIN	TYP	MAX	UNIT
LPM1 current	XOSC off, digital regulator on. State retention.		175	250	µA
	T_A=-40 to 125°C, VDD=1.8 to 3.8 V, f_c =2394 to 2507 MHz			1000	µA
LPM2 current	XOSC off, digital regulator off. No state retention.		30	120	nA
	T_A=-40 to 125°C, VDD=1.8 to 3.8 V, f_c =2394 to 2507 MHz			4.5	µA

5.5 Receive Parameters

T_A =25°C, VDD=3.0 V, f_c =2440 MHz if nothing else stated. All parameters measured on Texas Instruments' CC2520 EM 2.1 reference design with 50 Ω load.

PARAMETER	CONDITIONS	MIN	TYP	MAX	UNIT
Receiver sensitivity	[2] requires -85 dBm	-99	-98	-95	dBm
	T_A=-40 to 125°C, VDD=1.8 to 3.8V, f_c =2394 to 2507 MHz			-88	dBm
Saturation	[2] requires -20 dBm		6		dBm
Interferer Rejection	Wanted signal 3 dB above the sensitivity level, 802.15.4 modulated interferer at 802.15.4 channels:				
	±5 MHz from wanted signal. [2] requires 0 dB		49		dB
	±10 MHz from wanted signal. [2] requires 30 dB		54		dB
	±20MHz or above. Wanted signal at -82dBm.		55		dB
Maximum Spurious Emission Conducted measurement in a 50Ω single ended load. Complies with EN 300 328, EN 300 440 class 2, FCC CFR47, Part 15 and ARIB STD-T-66	30 – 1000 MHz		< -80		dBm
	1 – 12.75 GHz		-56		dBm
Frequency error tolerance	Input level is 3 dB above sensitivity level.		+/-400		kHz
IIP3			-24		dBm

5.6 Frequency Synthesizer Parameters

T_A =25°C, VDD=3.0 V, f_c =2440 MHz if nothing else stated. All parameters measured on Texas Instruments' CC2520 EM 2.1 reference design with 50 Ω load.

PARAMETER	CONDITIONS	MIN	TYP	MAX	UNIT
Phase noise. Unmodulated carrier	At ±1 MHz offset from carrier		-111		dBc/Hz
	At ±2 MHz offset from carrier		-118		dBc/Hz
	At ±5 MHz offset from carrier		-128		dBc/Hz
RF Frequency range	Programmable in 1 MHz steps. Use 5 MHz steps for compliance with [2].	2394		2507	MHz

5.6.1 Transmit Parameters

T_A =25°C, VDD=3.0 V, f_c =2440 MHz if nothing else stated. All parameters measured on Texas Instruments' CC2520 EM 2.1 reference design with 50 Ω load.

PARAMETER	CONDITIONS	MIN	TYP	MAX	UNIT
Output power Note: to reduce the output power variation over temperature, it is suggested that different settings are used at different temperatures. The on-chip temperature sensor can be used for this purpose. Please see section 5.11 for more information.	0 dBm setting	-3	1	5	dBm
	+5 dBm setting	2	5	7	dBm
	T_A=-40 to 85°C, VDD=2.0 to 3.8 V, f_c =2394 to 2507 MHz	-3		8	dBm
	T_A=-40 to 85°C , VDD=1.8 to 3.8 V, f_c =2394 to 2507 MHz	-4		8	dBm
	T_A=-40 to 125°C, VDD=2.0 to 3.8 V, f_c =2394 to 2507 MHz	-6		8	dBm
	T_A=-40 to 125°C, VDD=1.8 to 3.8 V, f_c =2394 to 2507 MHz	-9		8	dBm

PARAMETER	CONDITIONS	MIN	TYP	MAX	UNIT
Largest spurious emission at maximum output power. Texas Instruments CC2520 EM reference design complies with EN 300 328, EN 300 440, FCC CFR47 Part 15 and ARIB STDT-66. Transmit on 2480 MHz under FCC at +5 dBm is supported by duty-cycling, or by reducing output power. The peak conducted spurious emission might violate ETSI and FCC restricted band limits at frequencies below 1GHz. All radiated spurious emissions are within the limits of ETSI/FCC/ARIB. Applications that must pass conducted requirements are suggested to use a simple 50 Ω high pass filter between matching network and RF connector.	25 MHz – 1 GHz (outside restricted bands)		-40		dBm
	25 MHz – 1 GHz (within FCC restricted bands)		-53		dBm
	47-74, 87.5-118, 174-230, 470-862 MHz (ETSI restricted bands)		-42		dBm
	1800 MHz-1900 MHz (ETSI restricted band)		-56		dBm
	5150 MHz-5300 MHz (ETSI restricted band)		-54		dBm
	At 2483.5 MHz and above (FCC restricted band)				
	f_c=2480 MHz, +5 dBm		-37		dBm
	f_c=2480 MHz, 0 dBm		-41		dBm
	At 2·RF and 3·RF (FCC restricted band)		-54		dBm
Error Vector Magnitude (EVM)	[2] requires max. 35%. Measured as defined by [2].				
	+5 dBm setting. f_c =IEEE 802.15.4 channels		6		%
	0 dBm setting. f_c =IEEE 802.15.4 channels		2		%

5.7 RSSI/CCA Parameters

T_A =25°C, VDD=3.0 V, f_c =2440 MHz if nothing else stated. All parameters measured on Texas Instruments' CC2520 EM 2.1 reference design with 50 Ω load.

PARAMETER	COMMENTS	MIN	TYP	MAX	UNIT
RSSI range			100		dB
RSSI/CCA accuracy			+/-4		dB
RSSI/CCA offset	Real RSSI = Register value - offset		76		dB
LSB value			1		dB

5.8 FREQEST Parameters

T_A =25°C, VDD=3.0 V, f_c =2440 MHz if nothing else stated. All parameters measured on Texas Instruments' CC2520 EM 2.1 reference design with 50 Ω load.

PARAMETER	COMMENTS	MIN	TYP	MAX	UNIT
FREQEST range			+/-300		kHz
FREQEST accuracy			+/-10		kHz
FREQEST offset	Real frequency offset = FREQEST value - offset		64		kHz
LSB value			7.8		kHz

5.9 Typical Performance Curves

T_A =25°C, VDD=3.0 V, f_c =2440 MHz if nothing else stated. All parameters measured on Texas Instruments' CC2520 EM 2.1 reference design with 50 Ω load.

SENSITIVITY VS TEMPERATURE

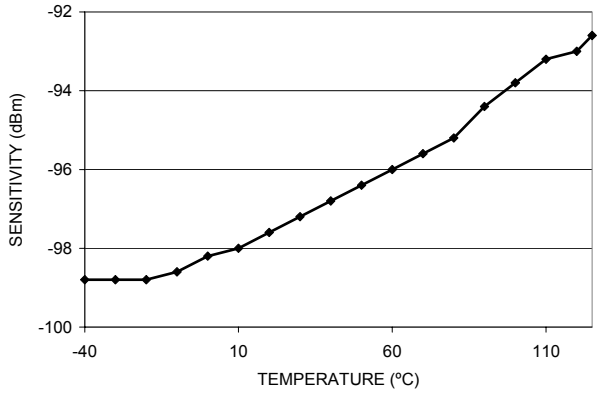

SENSITIVITY VS EVM

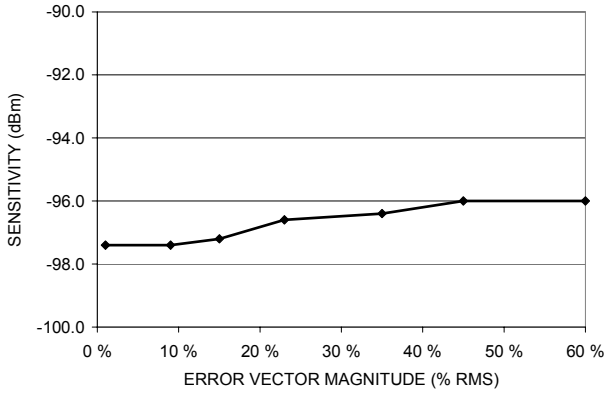

SENSITIVITY VS SUPPLY VOLTAGE

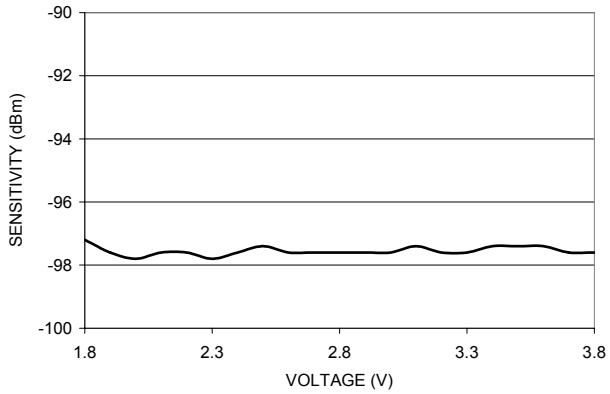

SENSITIVITY VS CARRIER FREQUENCY OFFSET

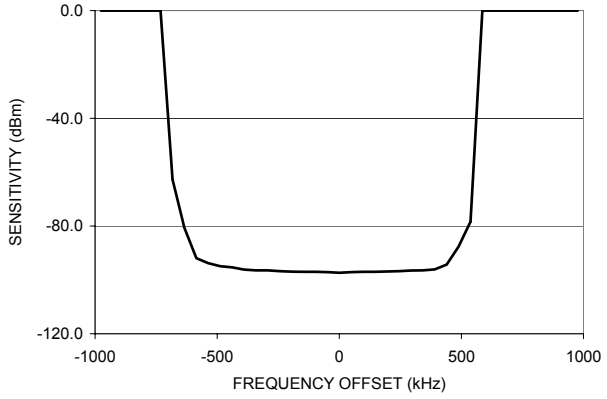

SENSITIVITY VS CARRIER FREQUENCY

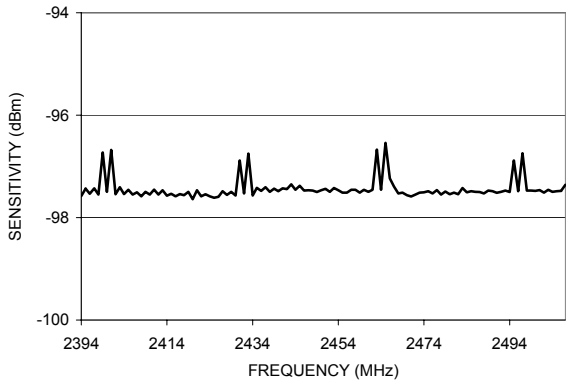

OUTPUT POWER VS TEMPERATURE

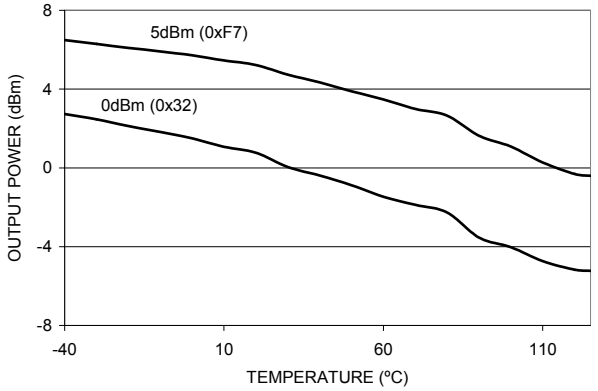

OUTPUT POWER VS SUPPLY VOLTAGE

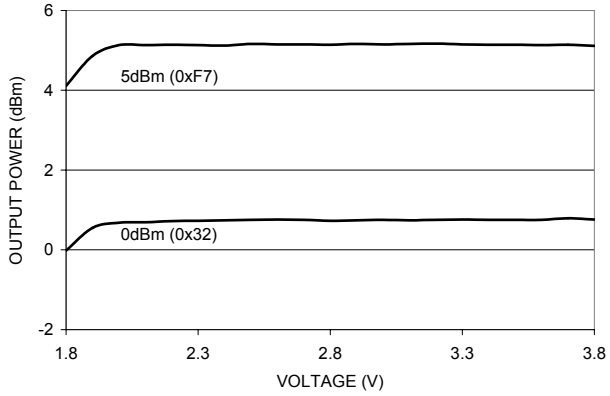

AM CURRENT VS TEMPERATURE

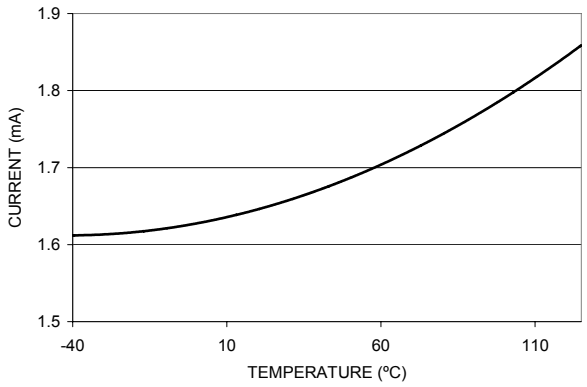

TX (5dBm setting, 0xF7) CURRENT VS TEMPERATURE

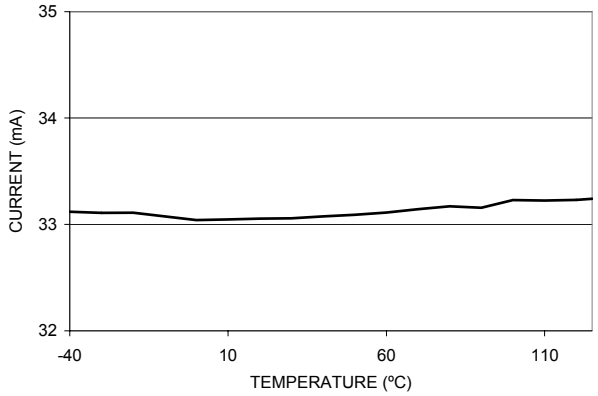

LPM1 CURRENT VS TEMPERATURE

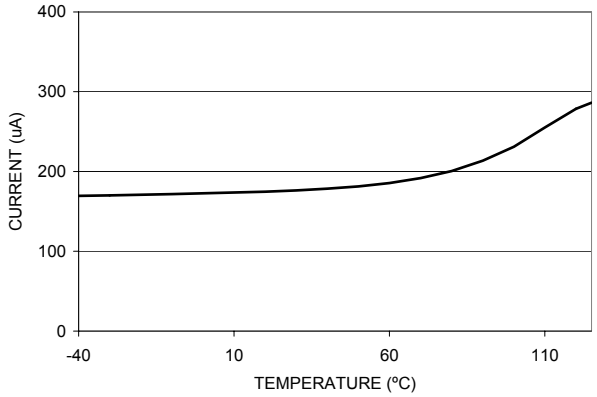

RX CURRENT VS TEMPERATURE

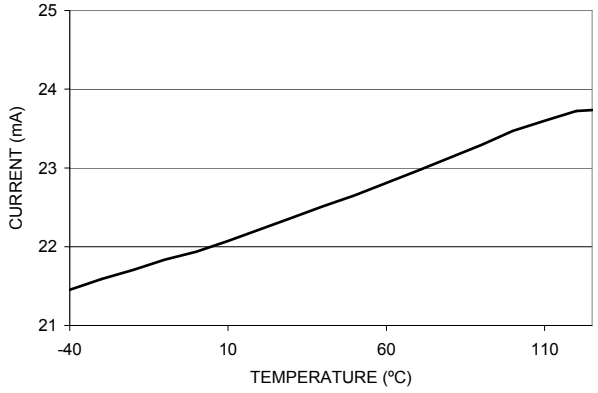

LPM2 CURRENT VS TEMPERATURE

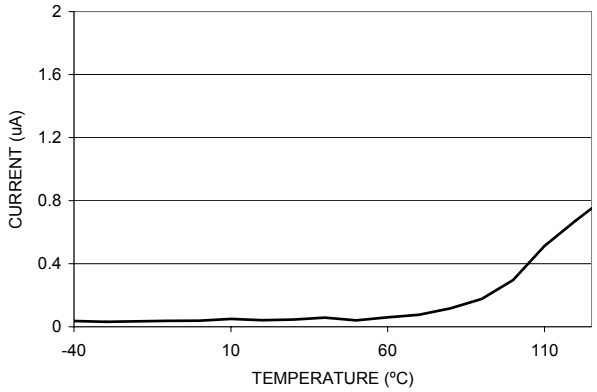

TX (+5dBm SETTING, 0xF7) CURRENT VS SUPPLY VOLTAGE

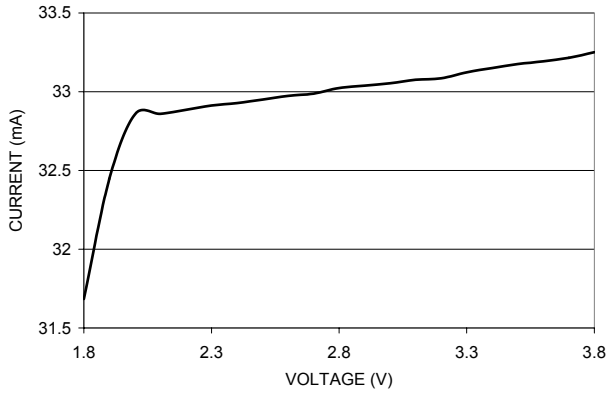

LPM1 CURRENT VS SUPPLY VOLTAGE

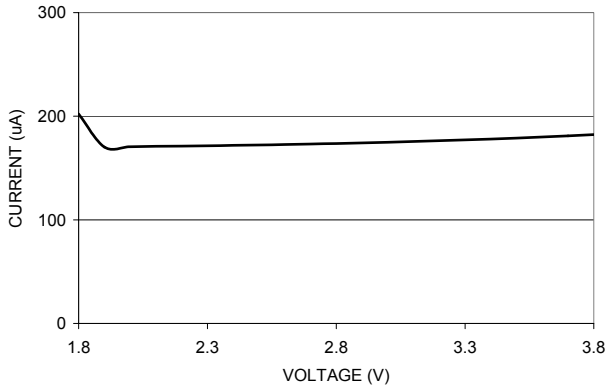

RX CURRENT VS SUPPLY VOLTAGE

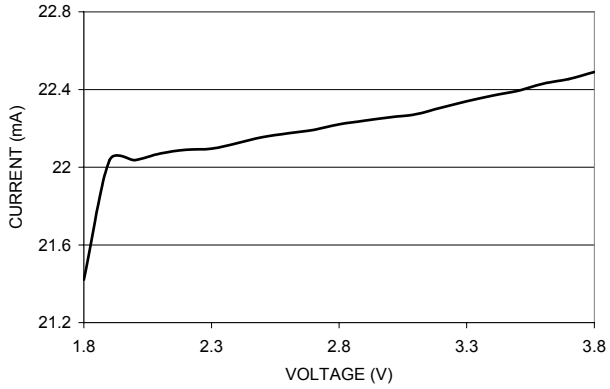

LPM2 CURRENT VS SUPPLY VOLTAGE

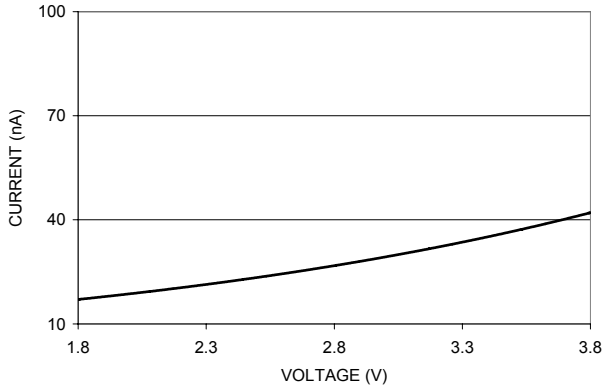

AM CURRENT VS SUPPLY VOLTAGE

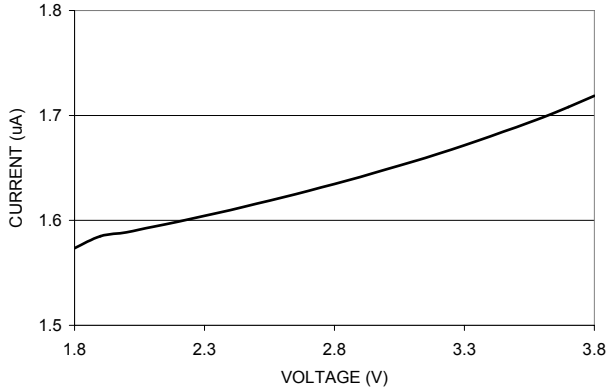

RX CURRENT VS INPUT LEVEL

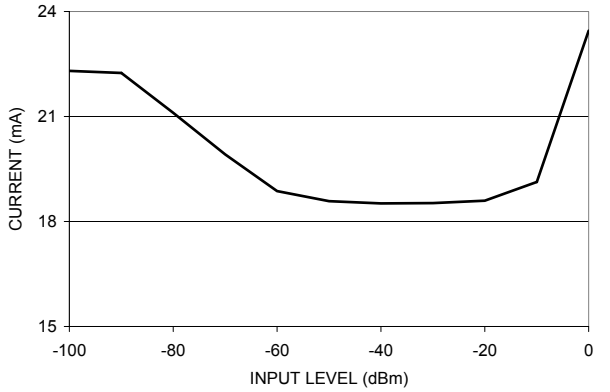

INTERFERER REJECTION (802.15.4 INTERFERER) VS INTERFERER FREQUENCY. CARRIER AT -82dBm/2440MHz.

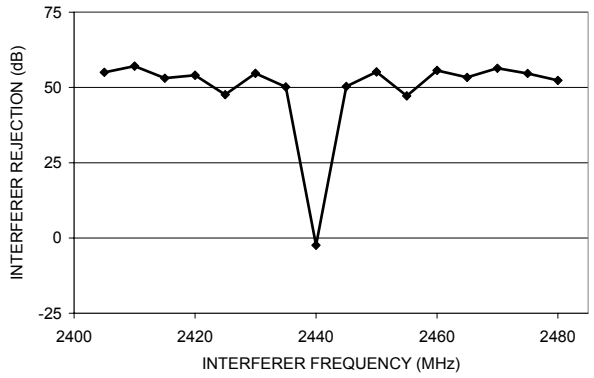

INTERFERER REJECTION VS 802.11g CARRIER AT -82dBm/2440MHz

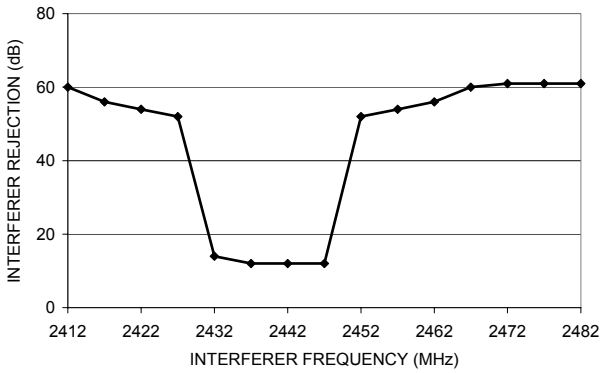

ADJACENT CHANNEL REJECTION (802.15.4 INTERFERER) VS CARRIER LEVEL

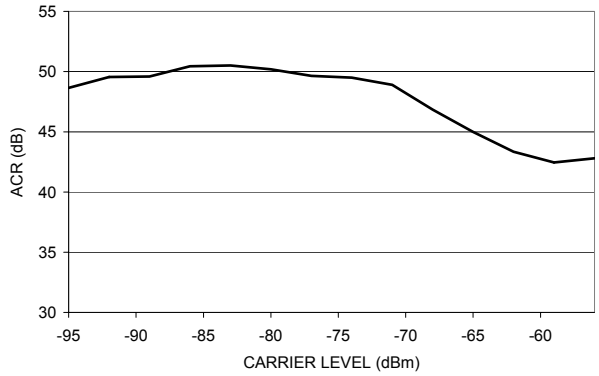

INTERFERER REJECTION VS 802.11g CARRIER AT -82dBm/2480MHz

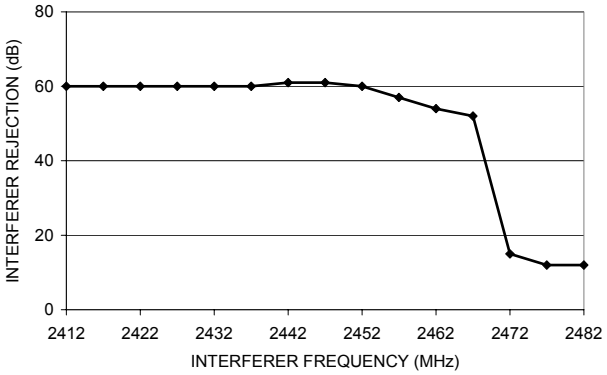

INTERFERER REJECTION VS 802.11g CARRIER AT -82dBm/2405MHz

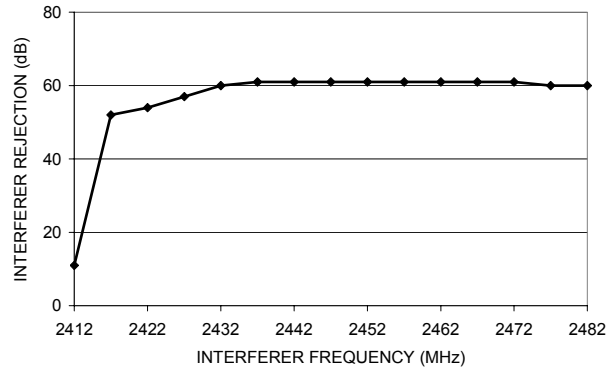

FALSE PACKET RATE AND SENSITIVITY vs CORRELATION THRESHOLD

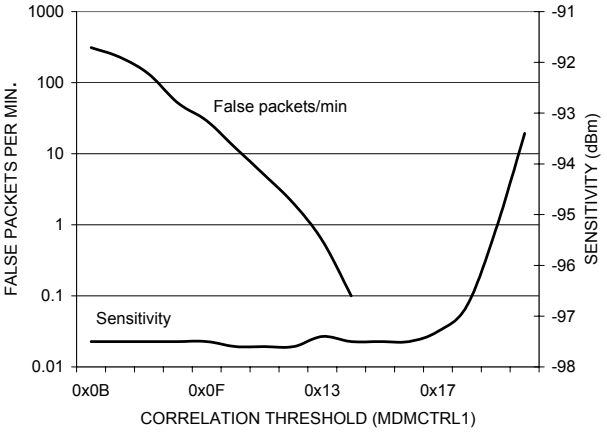

FREQEST VS ACTUAL OFFSET FREQUENCY

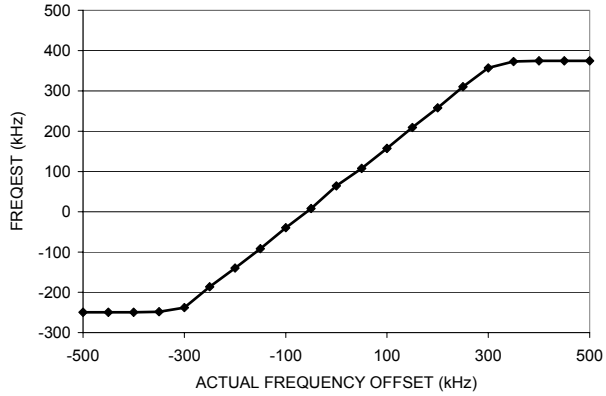

TEMPERATURE SENSOR OUTPUT VS SUPPLY VOLTAGE
(TEMPERATURE = 25ºC)

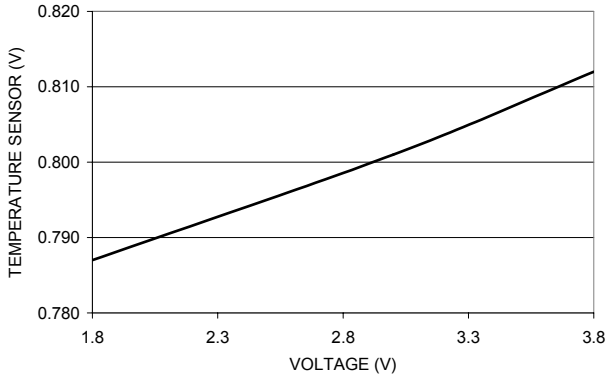

OFFSET CORRECTED RSSI VS INPUT LEVEL

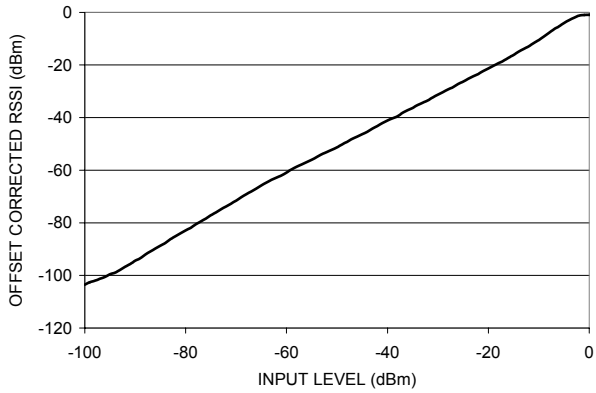

CORRELATION VALUE VS ERROR VECTOR
MAGNITUDE OF INPUT SIGNAL

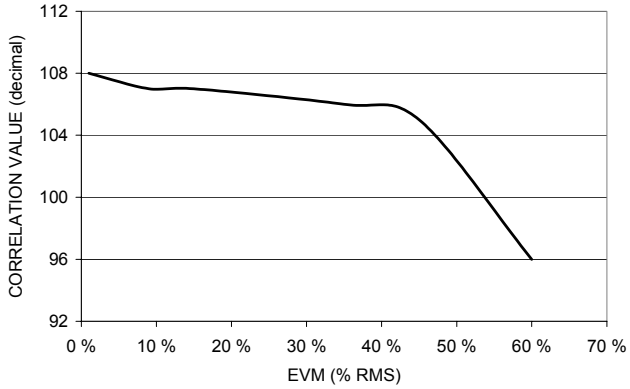

TEMPERATURE SENSOR OUTPUT VS TEMPERATURE
(SUPPLY VOLTAGE = 3V)

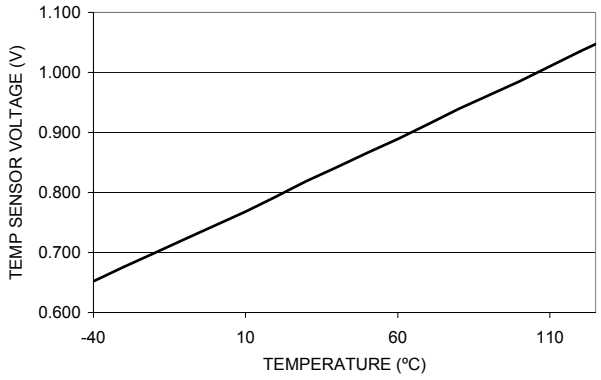

5.10 Low-Current Mode RX

Applications that spend more time waiting for an input signal than actually receiving it, might benefit from using the special low-current RX mode. This mode draws less current at the expense of sensitivity.

Note that when using this mode, neither RSSI nor CCA is valid. This means that these settings can not be used in conjunction with STXONCCA, for instance. Also note that the interferer rejection will drop at stronger input signal levels compared to when using the regular recommended settings.

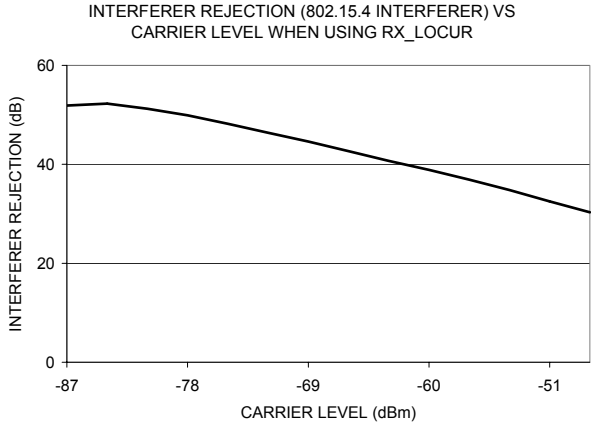

Important: The low-current RX mode is only valid from -40 to 85ºC !

5.10.1 Low-Current RX Mode Parameters

T_A =25°C, VDD=3.0 V, f_c=2440 MHz if nothing else stated. All parameters measured on Texas Instruments' CC2520 EM 2.1 reference design with 50 Ω load.

PARAMETER	CONDITIONS	MIN	TYP	MAX	UNIT
RX current	Wait for sync		18.8		mA
Sensitivity	[2] requires -85 dBm		-90		dBm
Interferer Rejection	Wanted signal 3 dB above the sensitivity level, 802.15.4 modulated interferer at 802.15.4 channels:				
	±5 MHz from wanted signal. [2] requires 0 dB		52		dB
	±10 MHz from wanted signal. [2] requires 30 dB		54		dB
	±20MHz or above.		55		dB

Table 1: Low-current RX mode. Use in addition to regular recommended settings.

Register	Setting (hex)	Comment
RXCTRL	33	Reduces sensitivity and current consumption
FSCTRL	12	Reduces current consumption and valid temperature range
AGCCTRL2	EB	Reduces sensitivity and current consumption

5.11 Optional Temperature Compensation of TX

Using the on-chip temperature sensor (or any other sensor), it is possible to adapt the settings to the actual temperature. This will reduce the variation in output power over temperature, which in the range -40ºC to 125ºC can be significant.

For this purpose, a TX setting only suited for high-temperature operation has been found (F7125deg). This setting should only be used above 70 degrees, but will significantly reduce the drop in output power at high temperatures.

Table 2: F7125deg setting, only suited for high temperature operation (only changes from recommended settings shown)

Register	Setting (hex)	Comment
TXCTRL	94	Increased output power at high temperatures.
FSCTRL	7B	Increased output power at high temperatures.

Table 3: Suggested TXPOWER register settings for different temperatures

Temperature	-40	-30	-20	-10	10	30	50	70	90	110	125	ºC
Recommended Setting	13	13	AB	AB	F2	F7	F7	F7125deg	F7125deg	F7125deg	F7125deg	-
Typical Output Power	3.6	3.3	4.3	4.1	4.2	4.3	3.5	3.6	2.7	1.9	1.1	dBm

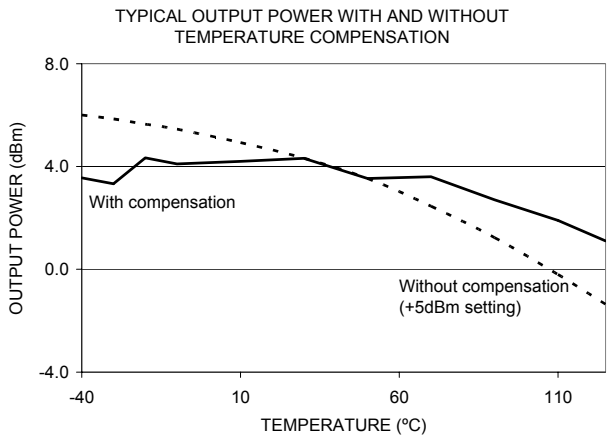

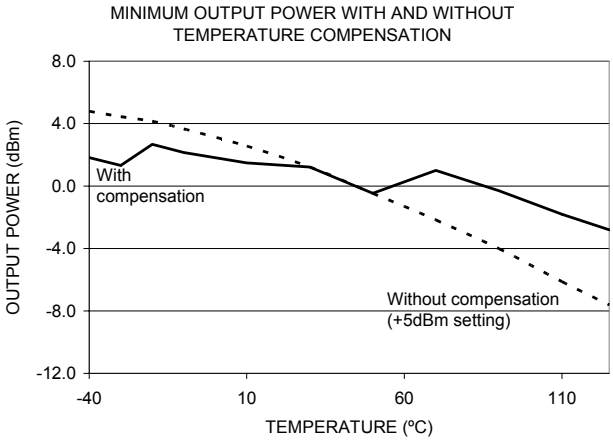

5.11.1 Using the Temperature Sensor

The on-chip temperature sensor can be accessed via the GPIO0 and GPIO1 pins by following this procedure:

- Configure GPIO0 and GPIO1 as inputs by writing 0x80 to the GPIOCTRL0 and GPIOCTRL1 registers.
- Enable analog output functionality for these two pins by setting GPIOCTRL.GPIO_ACTRL='1'.
- Select temperature sensor output by writing 0x01 to the ATEST register. This will make GPIO1 output GND and GPIO0 will output a voltage proportional to the temperature.
- Use an ADC in the microcontroller to measure the output voltage on GPIO0 and then calculate the temperature.

The output from the temperature sensor is shown in graph form in section 5.9, but as a basis for calculating the temperature, the following numbers can be used:

Tc=-40 – 125°C, VDD=1.8 – 3.8 V

Parameter	Min	Typ	Max	Unit
Temp sensor voltage at 25°C		0.8		V
Temp. sens. output vs temperature		25		mV/10°C
Temp. sens. output vs supply voltage		6		mV/V
Temp. sens accuracy no calibration (at fixed voltage)		+/-12		°C
Temp, sens. accuracy with 1-point calibration (at fixed voltage)		+/-1		°C

6 Crystal Specific Parameters

6.1 Crystal Requirements

PARAMETER	CONDITIONS	MIN	TYP	MAX	UNIT
Crystal frequency			32		MHz
Crystal frequency accuracy requirement	Including initial tolerance, aging and temperature dependency, as specified by [2]. Can be relaxed using on-chip crystal tuning (see below).	- 40		40	ppm
ESR				60	Ohm
C_0				7	pF
C_L				16	pF

6.2 On-chip Crystal Frequency Tuning

PARAMETER	CONDITIONS	MIN	TYP	MAX	UNIT
Crystal tuning range (C_{tune})	Only adding capacitance is possible		7		pF
Crystal tuning step size			0.4		pF
Crystal tuning drift	In % of applied tuning		+/-10		%
CRYSTAL TUNING USING CC2520 EM 2.1 REFERENCE DESIGN (NX3225DA, C_L = 16 pF) :					
Start-up time	NDK crystal NX3225DA, C_L=16 pF		0.2		ms
Crystal tuning step size			3		ppm
Crystal tuning range			-45		ppm
CRYSTAL TUNING USING OTHER CRYSTALS, ALL NUMBERS ARE ESTIMATES :					
Start-up time	NDK crystal NX4025DA, C_L=13 pF		0.2		ms
Crystal tuning step size			8		ppm
Crystal tuning range			-120		ppm
Start-up time	NDK crystal NX5032SA, C_L=10 pF		0.1		ms
Crystal tuning step size			10		ppm
Crystal tuning range			-160		ppm

See section 22 for further details on using the crystal oscillator.

7 Pinout

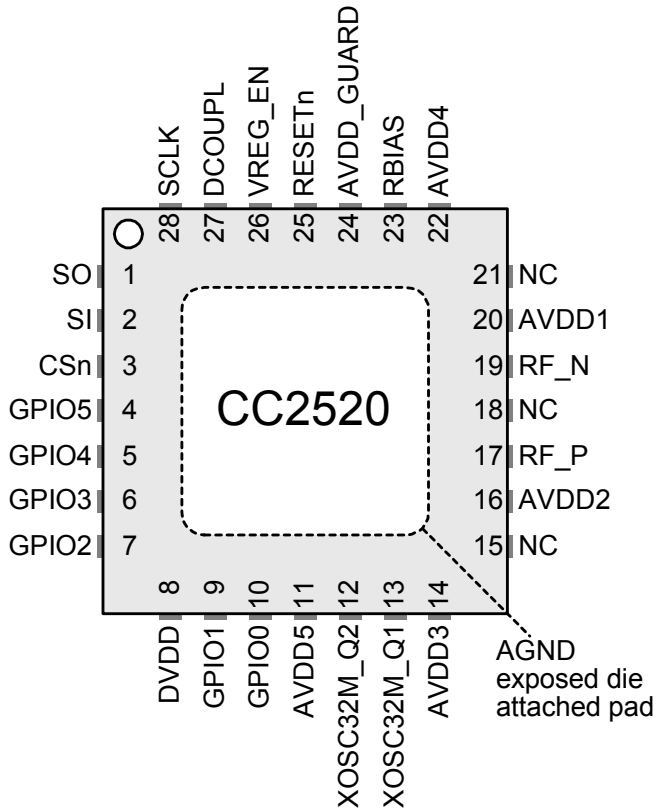

Figure 1: Pinout of CC2520 (top view)

Table 4: CC2520 Pinout

Signal	Pin #	Type	Description
SPI			
SCLK	28	I	SPI interface: Serial Clock. Maximum 8 MHz
SO	1	O	SPI interface: Serial Out
SI	2	I	SPI interface: Serial In
CSn	3	I	SPI interface: Chip Select, active low
General Purpose digital I/O			
GPIO0	10	IO	General purpose digital I/O
GPIO1	9	IO	General purpose digital I/O
GPIO2	7	IO	General purpose digital I/O
GPIO3	6	IO	General purpose digital I/O
GPIO4	5	IO	General purpose digital I/O
GPIO5	4	IO	General purpose digital I/O
Misc			
RESETn	25	I	External reset pin, active low
VREG_EN	26	I	When high, digital voltage regulator is active.
NC	15, 18, 21		Not Connected.

Signal	Pin #	Type	Description
Analog			
RBIAS	23	Analog IO	External precision bias resistor for reference current. 56 kΩ, ±1%
RF_N	19	RF IO	Negative RF input signal to LNA in receive mode Negative RF output signal from PA in transmit mode
RF_P	17	RF IO	Positive RF input signal to LNA in receive mode Positive RF output signal from PA in transmit mode
XOSC32M_Q1	13	Analog IO	Crystal oscillator pin 1
XOSC32M_Q2	12	Analog IO	Crystal oscillator pin 2
Power/ground			
AVDD	11, 14, 16, 20, 22	Power (Analog)	1.8 V to 3.8 V analog power supply connections
AVDD_GUARD	24	Power (Analog)	Power supply connection for digital noise isolation and digital voltage regulator.
DCOUPL	27	Power (Digital) O	1.6 V to 2.0 V digital power supply output for decoupling. Note: this pin can not be used to supply any external devices.
DVDD	8	Power (Digital)	1.8 V to 3.8 V digital power supply for digital pads.
AGND	Die pad	Ground (Analog)	

8 Functional Introduction

8.1 Integrated 2.4 GHz IEEE 802.15.4 Compliant Radio

CC2520 features a Direct Conversion Transceiver operating in the 2.4 GHz band with excellent receiver sensitivity and robustness to interferers. The CC2520 radio complies with the IEEE 802.15.4 PHY specification. The radio has 250 kbps data rate, 2 Mchip/s chip rate, and is suitable for systems targeting compliance with worldwide radio frequency regulations covered by ETSI EN 300 328 and EN 300 440 class 2 (Europe), FCC CFR47 Part 15 (US) and ARIB STD-T66 (Japan).

8.2 Comparison to CC2420

CC2520 represents significant improvement over the CC2420 features and performance. A comparison is given in the table below.

Table 5: Comparison of CC2420 and CC2520

Feature	CC2420	CC2520
Standard	IEEE 802.15.4-2003	IEEE 802.15.4-2006
Maximum output power	0 dB	+5 dB
Typical sensitivity	-95 dBm	-98 dBm
General clock output	No	Yes, configurable frequency 1-16MHz
User interface	Command strobes and configuration registers. All user control goes through the SPI.	Instruction set (which includes the command strobes as a subset) and configuration registers. Command strobes may be triggered by GPIO pins, which gives excellent timing control. Improved status information.
Register access	Possible without crystal oscillator running.	Only possible when crystal oscillator is running.
Digital inputs	No Schmitt triggers	Schmitt triggers on all digital inputs.
Digital outputs	Fixed configuration	Highly flexible and configurable
Start up	Manual start of XOSC	XOSC starts automatically after reset (by reset_n pin). Manual start of XOSC after SRES instruction.
Crystal frequency	16 MHz	32 MHz
Packet sniffing	No hardware support	Hardware support for non-intrusive sniffing of both transmitted and received frames.
Maximum SPI clock speed	10 MHz	8 MHz
RAM size	364 byte	768 byte
Operating voltage	2.1 – 3.6 V	1.8 – 3.8 V
Maximum operating temperature	85°C	125°C
Security	Limited flexibility	Highly flexible security instructions. More RAM available allows more flexible processing.
Package	QLP-48, 7x7 mm	QFN 28 (RHD), 5x5 mm
RF frequency range	2400-2483.5 MHz	2394-2507 MHz

8.3 Block Diagram

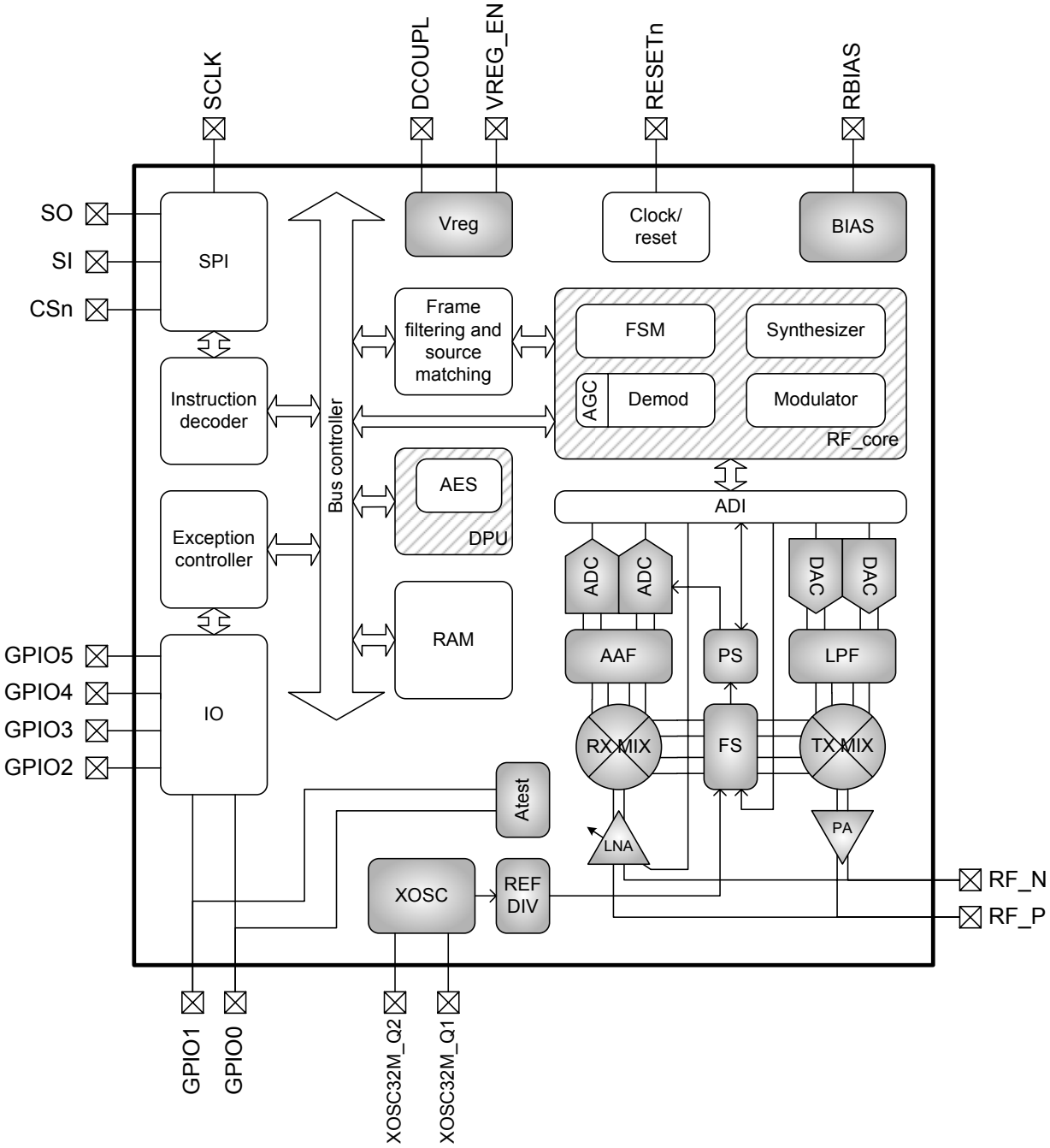

Figure 2: CC2520 block diagram

CC2520 is typically controlled by a microcontroller connected to the **SPI** and some GPIOs. The microcontroller will send instructions to CC2520 and it is the responsibility of the **instruction decoder** to execute the instructions or pass them on to other modules.

The execution of an instruction or external events (e.g. reception of a frame) may result in one or more exceptions. The exceptions provide a very flexible mechanism for automating tasks. They can for instance be used to trigger execution of other instructions or they can be routed out to GPIO pins and used as interrupt signals to the microcontroller. The **exception controller** is responsible for handling of the exceptions.

The microcontroller will typically be connected to one or more of the GPIO pins. The function of each pin is independently controlled by the **IO** module based on register settings. It is possible to observe a large number of internal signals on the GPIO pins. The GPIO pins can also be configured as inputs and used to trigger the execution of certain instructions. This would typically be used when the microcontroller needs to precisely control the timing of an instruction.

The **RAM** module contains memory which is used for receive and transmit FIFOs (in fixed address ranges) and temporary storage for other data. There are separate instructions for general memory access and FIFO access.

The **data processing unit (DPU)** is responsible for execution of the more advanced instructions. The DPU includes an AES core, which is used while executing the security instructions. Memory management (copying, incrementing etc.) is also performed by the DPU.

The **Clock/Reset** module generates the internal clocks and reset signals.

The **RF core** contains several submodules that support and control the analog radio modules.

The **FSM** submodule controls the RF transceiver state, the transmitter and receiver FIFOs and most of the dynamically controlled analog signals such as power up / down of analog modules. The FSM is used to provide the correct sequencing of events (such as performing an FS calibration before enabling the receiver). Also, it provides step by step processing of incoming frames from the demodulator: reading the frame length, counting the number of bytes received, checks the FCS, and finally, optionally handles automatic transmission of ACK frames after successful frame reception. It performs similar tasks in TX including performing an optional CCA before transmission and automatically going to RX after the end of transmission to receive an ACK frame. Finally, the FSM controls the transfer of data between modulator/demodulator and the TXFIFO/RXFIFO in RAM.

The **modulator** transforms raw data into I/Q signals to the transmitter DAC. This is done in compliance with the IEEE 802.15.4 standard.

The **demodulator** is responsible for retrieving the sent data from the received signal.

The amplitude information from the demodulator is used by the **automatic gain control (AGC)**. The AGC adjusts the gain of the analog LNA so that the signal level within the receiver is approximately constant..

The **frame filtering and source matching** supports the FSM in RF_core by performing all operations needed in order to do frame filtering and source address matching, as defined by IEEE 802.15.4.

The **xosc** module interfaces the crystal which is connected to the XOSC32M_Q1 and XOSC32M_Q2 pins. The xosc module generates a clock for the digital part and RF system, and implements the programmable crystal frequency tuning.

The **BIAS** module generates voltage and current references. It relies on a high precision (1%) 56kΩ external resistor which is shown in the application circuit in Figure 3.

The **TX DACs** convert the digital baseband signal to analog signals.

After LPF the signal is fed to the **TXMIX** module, which is an up-converting complex mixer.

The **PA** amplifies the RF signal up to a maximum of ~5dBm during TX.

The **LNA** amplifies the received RF signal. The gain is controlled by the digital AGC module so that optimum sensitivity and interferer rejection is achieved.

The **RXMIX** module is a complex down-mixer that converts the RF signal to a baseband signal.

A passive **anti-aliasing filter (AAF)** low pass filters the signal after down mixing.

The low pass filtered I and Q signals and digitized by the **ADC.**

The **frequency synthesizer (FS)** generates the carrier wave for the RF signal.

The **voltage regulator (Vreg)** provides a 1.8V supply voltage to the digital core. It contains a current limiter, which is enabled for currents above ~32mA.

9 Application Circuit

Very few external components are required for the operation of CC2520. A typical application circuit is shown in Figure 4. Note that it does not show how the board layout should be done. The board layout will greatly influence the RF performance of CC2520.

This section is meant as an introduction only. For further details, see the reference design, which includes complete board layouts and bill of materials with manufacturer and part numbers. The reference design can be downloaded from the CC2520 product folder [7].

Note that decoupling capacitors are not shown in the figure below. See the reference design for complete bill of materials.

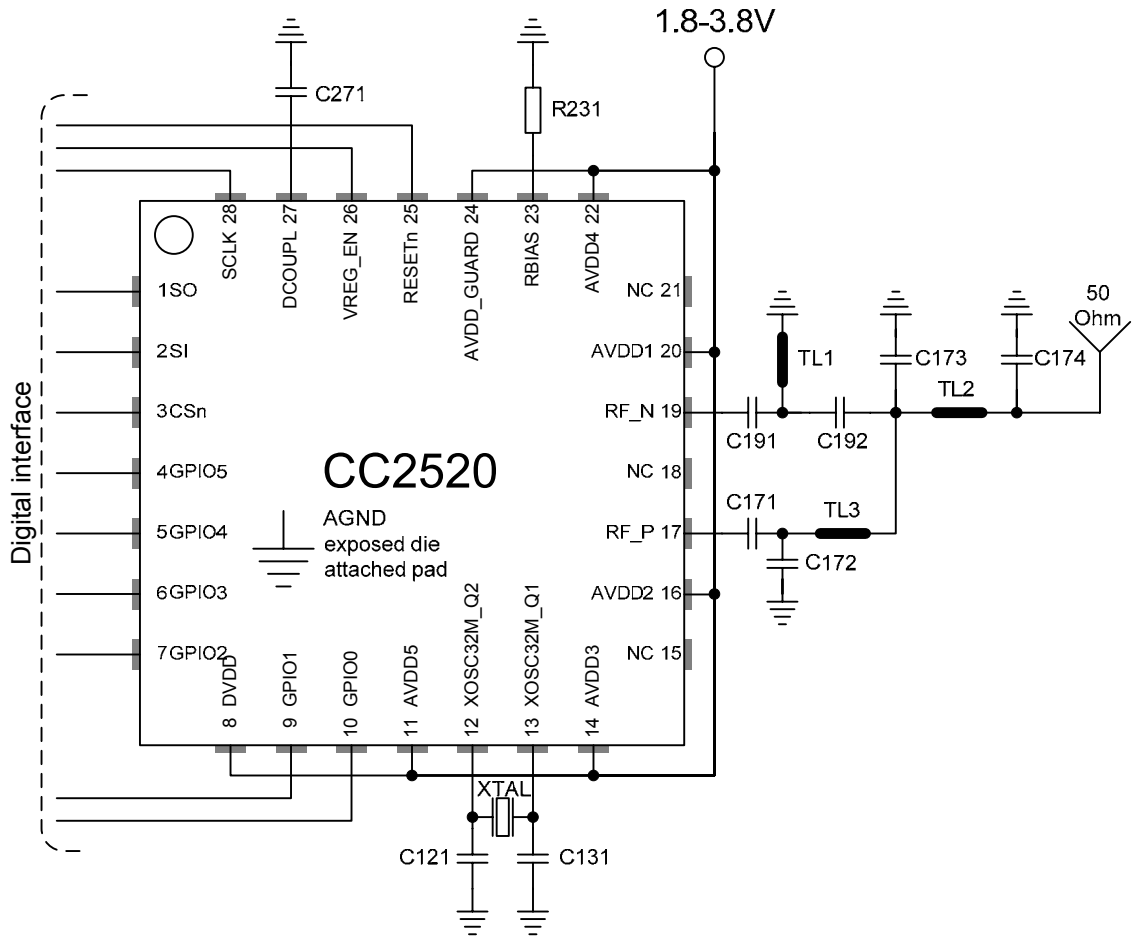

Figure 3: Typical application circuit with transmission line balun for single-ended operation

See the antenna selection guide [12] for further details on other compact and low-cost alternatives.

9.1 Input / Output Matching

The RF input/output is high impedance and differential.

When using an unbalanced antenna such as a monopole, a balun should be used in order to optimize performance. The balun can be implemented using low-cost discrete inductors and capacitors only or in combination with transmission lines replacing the discrete inductors.

Figure 4 shows the balun implemented in a two-layer reference design. It consists of three transmission lines (L1, L2 and L3) and the discrete components C191, C171, C192, C173 and C174. The circuit will present the optimum RF termination to CC2520 with a 50Ω load on the antenna connection.

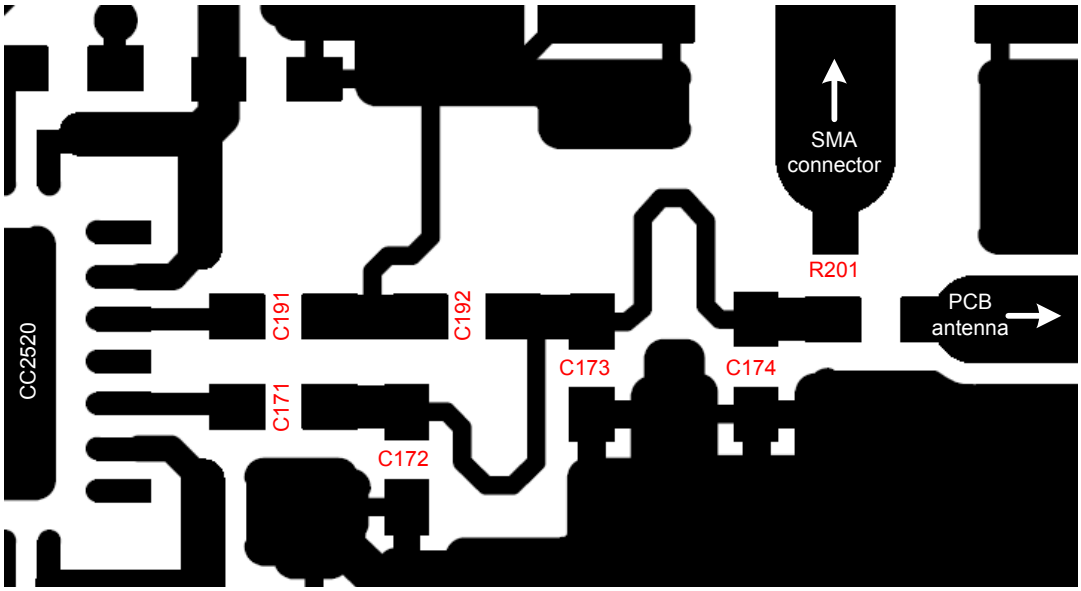

Figure 4: Actual board layout of the RF section of the reference design (rev 2.1).

9.2 Bias Resistor

The bias resistor R231 is used to set an accurate bias current. A high precision (±1%) 56kΩ resistor should be used.

9.3 Crystal

An external 32MHz crystal with two loading capacitors (C121 and C131) is used for the crystal oscillator.

It is possible to feed a single-ended signal to the XOSC32M_Q1 pin and thus not use a crystal.

9.4 Digital Voltage Regulator

The on chip voltage regulator supplies 1.8 V to the digital part of CC2520. C271 is a decoupling capacitor for the voltage regulator. Note that this should not be used to provide power to other IC's.

9.5 Power Supply Decoupling and Filtering

Proper power supply decoupling must be used for optimum performance. This is shown as a lumped capacitor C1 in Figure 4. The placement and size of the decoupling capacitors and the power supply filtering are very important to achieve the best performance in an application. TI provides a compact reference design that should be followed very closely.

9.6 Board Layout Guidelines

It is highly recommended to copy the board layout from the reference design [5].

- It is recommended to use star topology for the power supplies to CC2520.
- The power supply decoupling capacitor C1 is a lumped component. On the actual board layout there should be separate decoupling capacitors as close to each of the power pins as possible.
- The balun is highly layout sensitive. The inductors in Figure 4 are actually transmission lines embedded in the PCB and their values must be adapted according to the board layout. The values of the capacitors C192, C172, C173 and C174 must also be adapted to the actual board layout.
- The GPIO pins can be configured to use internal pull-up resistors. They are not enabled after a reset or in LPM2. Remember to take the default GPIO configuration into consideration when connecting these signals, because there will be some time before the MCU is able to change the configuration. In LPM2 GPIO5 (which is configured as an input) should be connected to either

ground or VDD. The other GPIO pins should be grounded or high impedance. Failing to do this, will result in significantly higher current consumption than necessary.

- The SO pin is configured as an input when CSn is high or the device is in reset or LPM2. This makes it possible to connect multiple SPI slaves to one SPI master. This pin should not be left floating when in LPM2, as this will draw more current than necessary. If the voltage level can not be controlled in any other way, use a 1MOhm pull-down resistor.
- The crystal input lines should be routed as far away from each other as practically possible.
- The NC pins can be left floating.
- Glitches on the digital inputs may create serious issues in a system design. The digital input pads have Schmitt-triggers to help make them less sensitive to glitches, but the board layout should still avoid routing the digital input lines close to other noisy signals.

9.7 Antenna Considerations

The reference design contains two antenna options. As default, the SMA connector is connected to the balun through a 0Ω resistor. This resistor can be soldered off and rotated 90° clockwise in order to connect to the PCB antenna, which is a planar inverted F antenna (PIFA).

Note that all testing and characterization has been done using the SMA connector. The PCB antenna has only been functionally tested by establishing a link between two EMs. In our experiment, the PCB antenna gave approximately the same range as when using an antenna connected to the SMA connector.

Please refer to the antenna selection guide [12] and the Inverted F antenna app note [11] for further details.

9.8 Choosing the Most Suitable Interconnection with a Microcontroller

- Connect the 4 SPI signals; CSn, SCLK, SI and SO to the microcontroller.
  These signals are required in order to configure CC2520 and exchange data with it.
- Connect RESETn to the microcontroller. Using the RESETn signal is the recommended way to reset CC2520 for instance after powering up. If saving a pin is critical, the RESETn pin can be connected to VDD. The CC2520 can still be reset with the SRES command strobe. This will also require a manual start of the crystal oscillator by issuing a SXOSCON command strobe.
- Connecting VREG_EN to the microcontroller will make it possible to put CC2520 into LPM2 to save power. VREG_EN may be connected to VDD and thus always leave the regulator on. If power saving is not important in the target application, this may be an acceptable way of saving a pin.
- Connecting one or more of the GPIOs to the microcontroller is optional.
  The number of GPIOs to connect depends on the application. Connecting more GPIOs to the microcontroller generally gives more flexibility and less SPI traffic because it reduces the need to keep reconfiguring the GPIOs for different uses.
- If CC2520 will be providing clock to the microcontroller, GPIO0 should be connected to the clock input of the microcontroller. After reset, GPIO0 will output a 1MHz clock signal with 50/50 duty cycle.

The digital IO of CC2520 is described in more detail from section 12.

9.9 Interfacing CC2520 and MSP430F2618

The MSP430F2618 is well suited for use with the CC2520. The suggested interfacing of these two chips is given in Table 5. The interconnections shown in Table 6 are exactly the same as is used in the CC2520 development kit [5].

Table 6: Interconnection of MSP430F2618 and CC2520

CC2520	MSP430F2618
VREG_EN	P01.0/TACLK/CAOUT
RESETn	P05.7/TBOUTH/SVSOUT
SCLK	P05.3/UCB1CLK/UCA1STE
SO	P05.2/UCB1SOMI/UCB1SCL
SI	P05.1/UCB1SIMO/UCB1SDA
CSn	P05.0/UCB1STE/UCA1CLK
GPIO0	P01.3/TA2
GPIO1	P01.5/TA0
GPIO2	P01.6/TA1
GPIO3	P01.1/TA0/BSLTX
GPIO4	P01.2/TA1
GPIO5	P01.7/TA2

A simplified drawing of the interconnection of MSP430F2618 and CC2520 is shown in Figure 8. For further details on the MSP430F2618, please refer to [10].

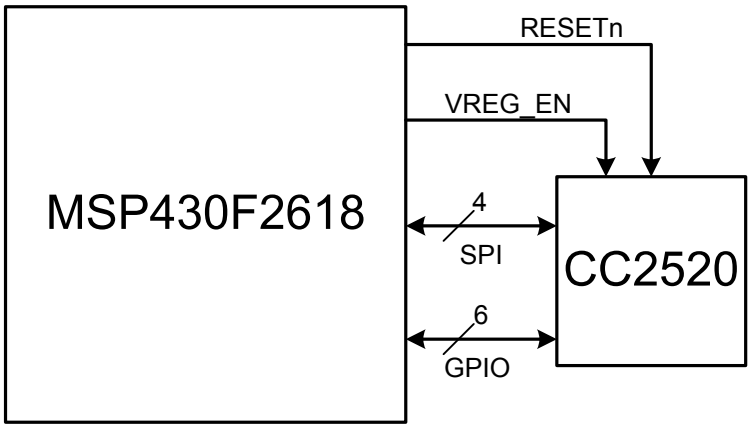

Figure 5: Interconnection of MSP430F2618 and CC2520

10 Serial Peripheral Interface (SPI)

The SPI provides an interface for giving instructions to the CC2520 and transferring data between CC2520 and a microcontroller. The CC2520 4-wire slave interface consists of three input signals (CSn, SCLK and SI) and one output signal (SO).

In section 15 all instructions available via the SPI interface are listed and described. The instructions are byte oriented and required bytes sent over the interface to CC2520 vary from 1 and up. To transfer one byte CSn must be pulled low and SCLK must complete 8 periods starting with a positive edge. There are no requirements to maximum period for SCLK or that it needs to be continuous. As long as CSn is held low, SCLK can be halted at any time and started again when desired.

10.1 CSn

CSn is an input enable signal for the SPI and is controlled by the external MCU. The CSn signal is used as an asynchronous active high reset to the SPI module.

CSn must be held low during all SPI operations and must also be held low for more than two periods of XOSC before the first positive edge of SCLK and more than two periods of XOSC after the last negative edge of SCLK.

When CSn is high it must be held high for at least 2 periods of XOSC.

CSn can be held low between SPI operations in the case where the last instruction completed has a constant number of bytes, but this will result in unnecessary power consumption since parts of the instruction controller will then be running.

The instructions that have a constant number of bytes can be found in the instruction summary table in section 15.3. I.e. SRXON (1 byte) and RXMASKAND (3 bytes) has constant number of bytes and REGRD (2 bytes or more) has user controlled number of bytes indicated in the table by three dots (…) in the byte column after the last required byte of the instruction command (Byte 3 for REGRD).

Instructions that have user controlled number of bytes are ended by rising CSn.

Status is output as the first byte on SO during the first byte of all instructions. When instructions are transferred consecutively without rising CSn between them, the status byte on SO may not contain the correct current status. However, the status will be updated for the second byte of an instruction so i.e RXMASKAND which outputs status also during the second instruction byte will then output the correct status during the second byte.

When pulling CSn low after power-up, SO outputs the internal XOSC stable signal combinatorically, so no edge on SCLK is necessary to find the XOSC stable status. In any case where CSn is pulled low and SO is low it means that XOSC is still not stable and thus there is no clock in the digital part. The maximum time from power up to XOSC should be stable is described in section 5.3.

10.2 SCLK

SCLK is controlled by an external MCU and is an input clock to CC2520. SCLK is asynchronous to the internal XOSC clock in CC2520. The maximum SCLK frequency is 8 MHz. There is no minimum frequency requirement.

10.3 SI

SI is the serial data input from the microcontroller to CC2520. Data shall be sent with MSB first (bit 7 in each byte of instruction commands).

Data should be set up on the negative edge of SCLK and will be clocked into CC2520 by the next positive edge of SCLK.

10.4 SO

SO is serial data out from CC2520 to an external MCU. Data is clocked out on the negative edge of SCLK, so the SO signal should be sampled on the following rising edge of SCLK. MSB (bit 7 in register definitions) will be clocked out first.

SO is configured as an input when CSn is high or RESETn is low. Note that the SO pin should not be left floating while in LPM1 or LPM2, as this will result in higher current consumption than necessary.

10.5 SPI Timing Requirements

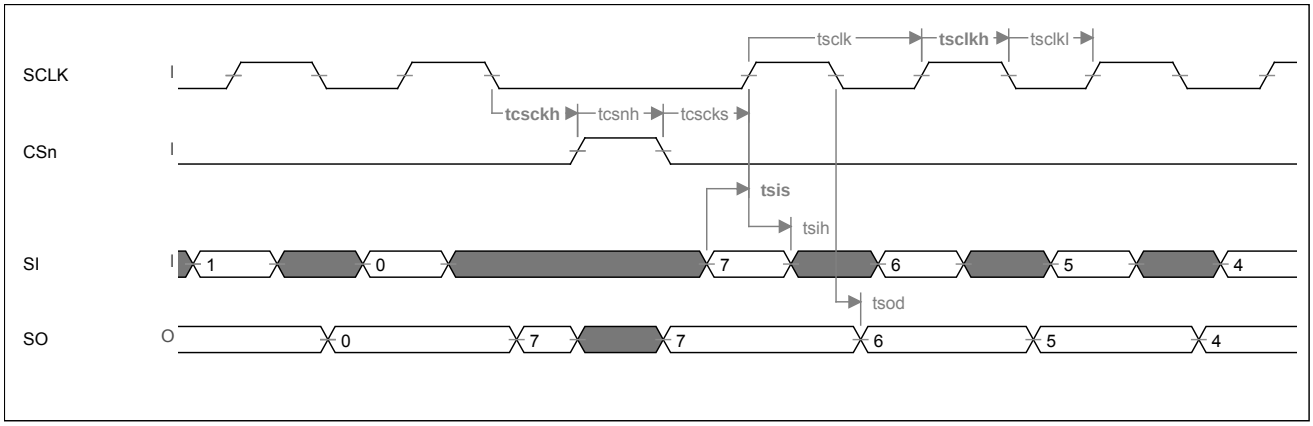

Figure 6: SPI timing relationships

The following table and figure shows required timing relations between an external microcontroller and the SPI interface on CC2520.

Table 7: SPI timing requirements

PARAMETER	DESCRIPTION	MIN	TYP	MAX	UNIT
tcscks	CSn to SCLK setup time	62.5			ns
tcsckh	SCLK to CSn hold time	62.5			ns
tcsnh	CSn high	62.5			ns
tsclk	SCLK period	125			ns
tsclkh	SCLK high time	62.5			ns
tsclkl	SCLK low time	62.5			ns
tsis	SI to SCLK setup time	31			ns
tsih	SI to SCLK hold time	31			ns
tsod	SCLK to SO delay			31	ns

11 GPIO

CC2520 has 6 GPIO pins that can be individually configured as inputs, outputs and activate pull-up resistors. Each GPIO has an associated register, GPIOCTRLn, where the MSB configure the pin to either input or output. The GPIOCTRL register control pull-up for each individual GPIO pin, extra drive strength for all pins and analog function for pin 0 and 1. See section 30 for details about test functionality and observability through GPIO.
Note that GPIO5, which is configured as an input in LPM2, should be tied either to ground or VDD when entering LPM2. If GPIO5 (or any other input) is left floating, the current consumption will be unpredictable.

11.1 Reset Configuration of GPIO Pins

The reset setting for GPIO pins are as shown in the table below. This is also the configuration that is used when the device is in LPM2. If a different GPIO setup is required, the GPIOs have to be re-configured every time CC2520 has been in LPM2.

This particular reset configuration was selected so that CC2520 looks as much like CC2420 as possible.

Table 8: GPIO reset state

GPIO pin	Dir	Value	Pull up	Extra drive	Polarity	Signal	GPIOCTRLn value (hex)	Description
0	Out	0	No	No	Positive	clock	0x00	1MHz clock signal with 50/50 duty cycle.
1	Out	0	No	No	Positive	fifo	0x27	High when one or more bytes are in the RX FIFO. Low during RX FIFO overflow.
2	Out	0	No	No	Positive	fifop	0x28	High when the number of bytes in the RX FIFO exceeds the programmable threshold or at least one complete frame is in the RX FIFO. Also high during RX FIFO overflow.
3	Out	0	No	No	Positive	cca	0x29	Clear channel assessment. See FSMSTAT1 register for details on how to configure the behavior of this signal.
4	Out	0	No	No	Positive	sfd	0x2A	Pin is high when SFD has been received or transmitted. Cleared when leaving RX/TX respectively.
5	In	Tie to ground or VDD	No	No	Positive		0x90	No function

11.2 GPIO as Input

When configured as input, the GPIO pin can be used to trigger one of 16 different command strobes (See section 15) as shown in the GPIO configuration table in section 12.6. These command strobes are a subset of all the SPI instructions available. The command strobe is triggered by applying a rising or falling edge to the GPIO pin depending on the setting in the GPIOPOLARITY register. Which command strobe the pin triggers is set by the 7 LSBs in GPIOCTRLn.

Example: Set up GPIO2 to run SACK instruction on rising edge.

- Set GPIOPOLARITY[2] to ‘1’. GPIO pin 2 set to rising edge active.
- Set GPOICTRL2[7:0] to “1000 0101” . GPIO pin 2 is now an input and connected to the SACK instruction.

11.3 GPIO as Output

When a GPIO pin is configured as an output, the signal corresponding to the CTRLn setting in GPIOCTRLn register (CTRLn values are shown in Table 8 in section 12.6). The polarity of the pin is set in the GPIOPOLARITY register.

Example: Set up GPIO3 to output sniff_data with active high level indication.

- Set GPIOPOLARITY[3] to ‘1’’. GPIO pin 3 set to active high level indication.
- Set GPIOCTRL3[7:0] to “0011 0010”. GPIO pin 3 is now an output and outputs sniff_data.

11.4 Switching Direction on GPIO

When switching from output to input, care must be taken so that command strobes are not triggered unintentionally. Changing GPIOn to a command strobe triggering input (one of the first 16 entries in Table 8) needs to be done using the following procedure to avoid changing direction while the pin is high:

1. Write 0x7E to GPIOCTRLn to make it output a constant 0.
2. Drive a ‘0’ from the microcontroller to the GPIO pin.
3. Write for instance 0x88 to GPIOCTRLn to change to input that triggers the STXON command strobe.

11.5 GPIO Configuration

Table 8 summarizes the signals that are available as output on any GPIO pin. The CTRLn column shows the configuration value that needs to be written to any one of the GPIOCTRL0-GPIOCTRL5 registers in order to get the described functionality. The IN column in Table 8 shows which command strobe that will be executed if the GPIO is configured as input and an edge (with the correct polarity) is applied. The OUT column shows the name of the internal signal that is observable on the pin if the GPIO is configured as an output.

Table 9: GPIO configuration

CTRLn (hex)	IN (Command strobes)	OUT	Description of OUT signal
0x00	SIBUFEX	Clock	Clock signal. Programmable frequency from 1MHz to 16MHz
0x01	SRXMASKBITCLR	RF_IDLE	RF_IDLE exception. See Table 14: Exceptions summary for details.
0x02	SRXMASKBITSET	TX_FRM_DONE	TX_FRM_DONE exception. See Table 14: Exceptions summary for details.
0x03	SRXON	TX_ACK_DONE	TX_ACK_DONE exception. See Table 14: Exceptions summary for details.
0x04	SSAMPLECCA	TX_UNDERFLOW	TX_UNDERFLOW exception. See Table 14: Exceptions summary for details.
0x05	SACK	TX_OVERFLOW	TX_OVERFLOW exception. See Table 14: Exceptions summary for details.
0x06	SACKPEND	RX_UNDERFLOW	RX_UNDERFLOW exception. See Table 14: Exceptions summary for details.
0x07	SNACK	RX_OVERFLOW	RX_OVERFLOW exception. See Table 14: Exceptions summary for details.
0x08	STXON	RXENABLE_ZERO	RXENABLE_ZERO exception. See Table 14: Exceptions summary for details.
0x09	STXONCCA	RX_FRM_DONE	RX_FRM_DONE exception. See Table 14: Exceptions summary for details.
0x0A	SFLUSHRX	RX_FRM_ACCEPTED	RX_FRM_ACCEPTED exception. See Table 14: Exceptions summary for details.
0x0B	SFLUSHTX	SRC_MATCH_DONE	SRC_MATCH_DONE exception. See Table 14: Exceptions summary for details.
0x0C	SRXFIFOPOP	SRC_MATCH_FOUND	SRC_MATCH_FOUND exception. See Table 14: Exceptions summary for details.
0x0D	STXCAL	FIFOP	FIFOP exception. See Table 14: Exceptions summary for details.
0x0E	SRFOFF	SFD	SFD exception. See Table 14: Exceptions summary for details.
0x0F	SXOSCOFF	DPU_DONE_L	DPU_DONE_L exception. See Table 14: Exceptions summary for details.
0x10		DPU_DONE_H	DPU_DONE_H exception. See Table 14: Exceptions summary for details.
0x11		MEMADDR_ERROR	MEMADDR_ERROR exception. See Table 14: Exceptions summary for details.
0x12		USAGE_ERROR	USAGE_ERROR exception. See Table 14: Exceptions summary for details.
0x13		OPERAND_ERROR	OPERAND_ERROR exception. See Table 14: Exceptions summary for details.
0x14		SPI_ERROR	SPI_ERROR exception. See Table 14: Exceptions summary for details.
0x15		RF_NO_LOCK	RF_NO_LOCK exception. See Table 14: Exceptions summary for details.
0x16		RX_FRM_ABORTED	RX_FRM_ABORTED exception. See Table 14: Exceptions summary for details.
0x17		RXBUFMOV_TIMEOUT	RXBUFMOV_TIMEOUT exception. See Table 14: Exceptions summary for details.
0x18		UNUSED	UNUSED exception. See Table 14: Exceptions summary for details.
...		Reserved	
0x21		Exception channel A	Pin is high when one or more of the exception flags in collection A are active. It is configurable which exceptions to include in collection A.

CTRLn (hex)	IN (Command strobes)	OUT	Description of OUT signal
0x22		Exception channel B	Pin is high when one or more of the exception flags in collection B are active. It is configurable which exceptions to include in collection B.
0x23		Complementary exception channel A	Pin is high when one or more exception flags not in collection A are active.
0x24		Complementary exception channel B	Pin is high when one or more exception flags not in collection B are active.
0x25		Predefined exception channel for RX related errors.	Predefined exception channel. High when one or more of the following exception flags are active: RX_UNDERFLOW, RX_OVERFLOW, RX_FRM_ABORTED and RXBUFMOV_TIMEOUT
0x26		Predefined exception channel for general error conditions.	High when one or more of the following exception flags are active: MEMADDR_ERROR, USAGE_ERROR, OPERAND_ERROR and SPI_ERROR.
0x27		fifo	Pin is high when one or more bytes are in the RXFIFO. Low during RXFIFO overflow.
0x28		fifop	Pin is high when the number of bytes in the RXFIFO exceeds the programmable threshold or at least one complete frame is in the RXFIFO. Also high during RXFIFO overflow. Not to be confused with the FIFOP exception.
0x29		cca	Clear channel assessment. See FSMSTAT1 register for details on how to configure the behavior of this signal.
0x2A		sfd	Pin is high when a SFD has been received or transmitted. Cleared when leaving RX/TX respectively. Not to be confused with the SFD exception.
0x2B		lock	Pin is high when frequency synthesizer is in lock.
0x2C		rssi_valid	Pin is high when the RSSI value has been updated at least once since RX was started. Cleared when leaving RX.
0x2D		sampled_cca	A sampled version of the CCA bit from demodulator. The value is updated whenever a SSAMPLECCA or STXONCCA strobe is issued.
0x2E		rand_i	Random data output from the I channel of the receiver. Updated at 8MHz.
0x2F		rand_q	Random data output from the Q channel of the receiver. Updated at 8MHz
0x30		rand_xor_ i_q	XOR between I and Q random outputs. Updated at 8MHz
0x31		sniff_clk	250kHz clock for packet sniffer data.
0x32		sniff_data	Data from packet sniffer. Sample data on rising edges of sniff_clk.
0x33		mod_serial_clk	250kHz serial data clock from modulator.
0x34		mod_serial_data	Serial data from modulator. Sample data on rising edges of mod_serial_clk.
...		Reserved	
0x43		rx_active	Indicates that FFCTRL is in one of the RX states. Active high. Note: This signal might have glitches, because it has no output flip-flop and is based on the current state register of the FFCTRL FSM.
0x44		tx_active	Indicates that FFCTRL is in one of the TX states. Active high. Note: This signal might have glitches, because it has no output flip-flop and is based on the current state register of the FFCTRL FSM.
...		Reserved	
0x5E		dpu_core_activepri(0)	High when the DPU is busy processing a low priority thread.
0x5F		dpu_core_activepri(1)	High when the DPU is busy processing a high priority thread.

CTRLn (hex)	IN (Command strobes)	OUT	Description of OUT signal
...		Reserved	
0x62		dpu_state_l_active	High when low priority thread is pending or active.
0x63		dpu_state_h_active	High when high priority thread is pending or active.
…		Reserved	
0x7E		'0'	Constant value
0x7F		'1'	Constant value

12 Power Modes

CC2520 has three power modes as described below. In all these power modes the supply voltage is applied to the circuit.

In **Low Power Mode 2** (LPM2) the digital voltage regulator is turned off (VREG_EN=0) and no clocks are running. No data is retained. All analog modules are in power down state.

In **Low Power Mode 1** (LPM1) the digital voltage regulator is on (VREG_EN=1), but no clocks are running. Data is retained. The power down signals to the analog modules are controlled by the digital part.

In **Active mode** the digital voltage regulator is on (VREG_EN=1) and the crystal oscillator clock is running. The power down signals to the analog modules are controlled by the digital part.

12.1 Switching Between Power Modes

When the device has been in LPM2, all register content is lost. To bring the device up to active mode, a reset is required or the device will be in an unknown state. The reset can be applied either by setting the RESETn pin low, or issuing a reset instruction (SRES) over the SPI. It is recommended that the RESETn method is used, because it will give a controlled start and automatic start of the crystal oscillator.

Before entering LPM2, it is strongly recommended that the device is reset. This way, the configuration will always be the same when the power to the digital part is removed, and it is less likely that there will be issues with current spikes or other side effects of the power being removed.

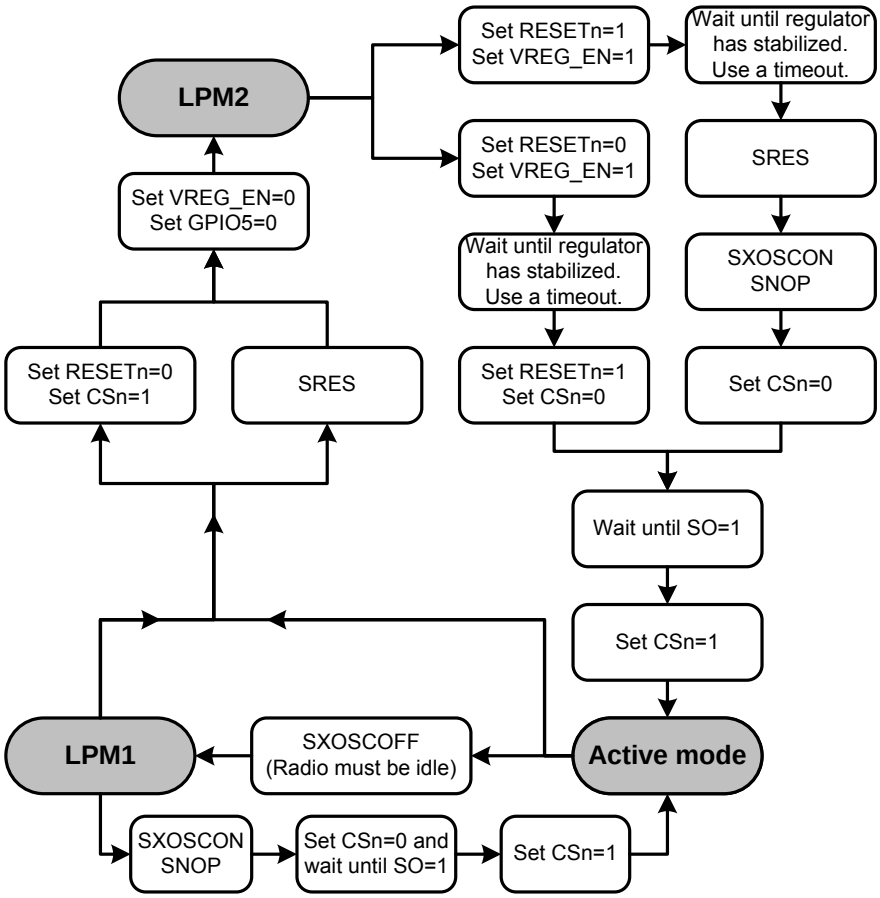

Figure 7: Procedures for switching between power modes.

12.2 Power Up Sequence Using RESETn (recommended)

When the RESETn pin is used it must be held low until the internal regulator has stabilized. This typically takes 0.1 ms. When the RESETn pin is set high, the crystal oscillator (in the CC2520 reference design) uses typically 0.2 ms to start. See section 6 for crystal specific parameters.

The GPIO pins are configured according to Table 8: GPIO reset state when power is applied to the chip and RESETn is held low.

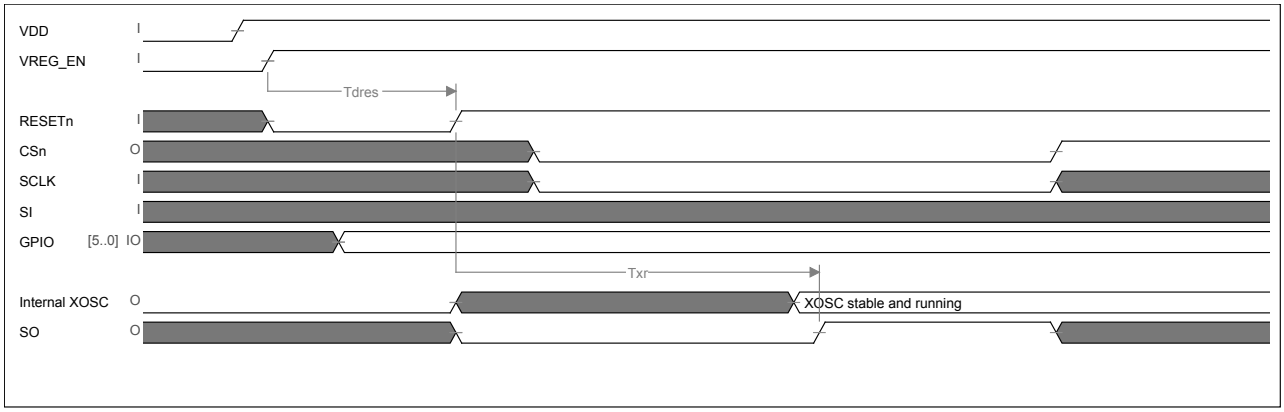

Figure 8: Power up sequence using RESETn

12.3 Power Up With SRES

If one prefers to use the SRES command strobe to reset the device after powering up, the CSn signal must be set low and SRES must be issued after the internal regulator has stabilized. Until the SRES command strobe has been issued, the chip will be in an unknown state. Note that this means it could theoretically for instance be transmitting.

The time from power is applied to the XOSC has started depends on the clock frequency used on the SPI (max 8MHz) and the startup time for the crystal.

Note that the crystal oscillator does not necessarily start automatically when the SRES command strobe is issued. That means one also has to issue an SXOSCON command strobe to be sure that the oscillator starts. Unlike the RESETn pin, the SRES command strobe will not influence the state of the crystal oscillator, so if the oscillator accidentally comes up in the “off” state, issuing a SRES will not make it start.

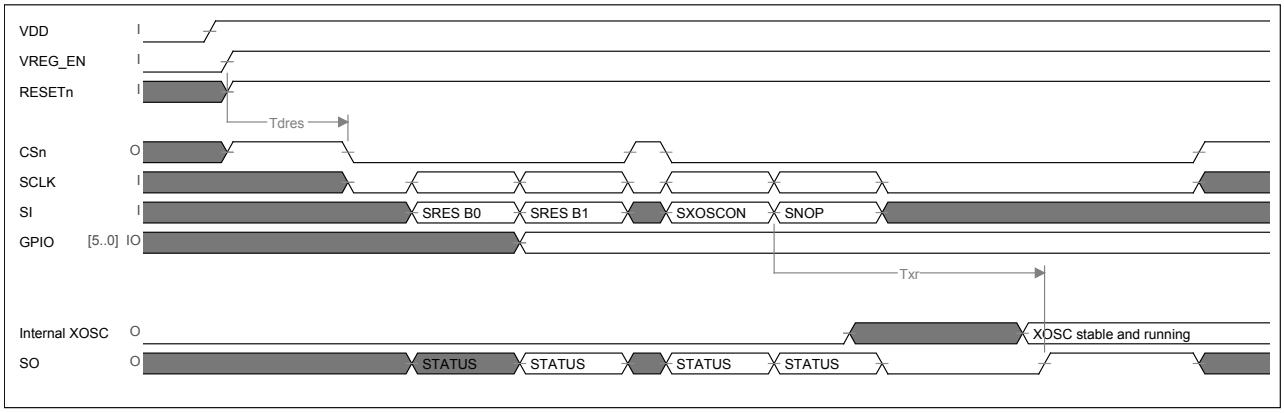

Figure 9: Power up sequence using SRES

Table 10: Start-up Timing

Name	Description	Time
Tdres	Time required after VREG_EN is activated until RESETn is released or CSn is set low.	≥ 0.1 ms
Txr	Time for internal XOSC to stabilize after RESETn is released or SXOSCON strobe is issued.	0.2 ms (crystal dependent)

13 Instruction Set

The CC2520 has a comprehensive instruction set. The instructions are transferred to CC2520 via the SPI, and can consist of one or more bytes. The first byte contains the unique op-code and the following bytes are parameters needed to execute the selected instruction. In the following sections, every instruction and parameter is described in detail.

13.1 Definitions

- All parameters and data are transferred over the SPI with their most significant bit first and their least significant bit last.
- For instructions that read data from CC2520, the data byte will replace the status byte on the SO pin.
- Address parameters point to the least significant byte in a block of data. The address A+1 contains the next but least significant byte and so on.
- When CC2520 automatically increments addresses, it will wrap around when incrementing beyond the highest possible address (0xFFF).
- An instruction is ended by either sending the complete instruction (for finite instructions) or raising CSn (For infinite instructions, indicated by "..." in the instructions summary).
- Once an instruction is ended a new instruction can be started.
- If an instruction is ended before it is complete or if the instruction is not recognized, an OPERAND_ERROR exception is raised.
- If the user sets parameter bits explicitly marked as '0' in instruction summary table to '1' an OPERAND_ERROR exception is raised.
- When an instruction is aborted an error exception is raised and the SPI interface ceases to receive further data until CSn has been set high then low again. The instruction that was aborted may have made changes to memory contents before it was aborted.
- If the SPI interface is reset (by pulling CSn high) in the middle of an SPI byte transfer (i.e. not between bytes) an SPI_ERROR exception is raised.

13.2 Instruction Descriptions

The codes shown below are used in the descriptions of the instructions. They represent bits selectable by the user. A sequence of bits thus represented by the same letter, even when spanning multiple bytes represents a word with a width equal to the number of repeated letters and with MSB the leftmost bit in the first byte transferred with this encoding. Such words may be represented in the text as a capital letter of the encoding letter in which case they shall be interpreted as a positive integer encoded by the bits represented in the encoding by the same letter only in lower-case.
Note that the bits that refer to one such integer need not be continuous in the encoding. So the encoding aaaaeeee aaaaaaaa eeeeeeee represents two 12 bit words transferred in three bytes with the most significant bits of each word transferred in the first byte.

Table 11: Codes used in instruction set description

Code	Description
a, e, k, n	Address data
b	Bit address
i	Instruction
d	Data
s	Status byte
p	Priority
m	Security parameter
c, f	Count
-	Don't care

Table 12: CC2520 instruction set

OPCODE	Inputs	Outputs	Description	Possible exceptions
Peripheral instructions				
IBUFLD	i[7:0]	s[7:0]	Load instruction into instruction buffer. The instruction buffer holds a single instruction 1 byte long. The instruction to be loaded, I, is held and shall be parsed as a normal instruction when SIBUFEX is executed as if those bytes had just been transferred to the SPI interface. Once the instruction held in the instruction buffer is executed it is replaced by SNOP.	
SIBUFEX Command strobe		s[7:0]	Execute the instruction stored in the instruction buffer as though those bytes had been transferred on the SPI interface. A USAGE_ERROR exception is raised if the instructions stored are not valid for use with the instruction buffer. The executed instruction may raise any exception it normally can.	USAGE_ERROR Special.
SSAMPLECCA Command strobe		s[7:0]	Sample the value of the CCA status signal, and store in status register.	
SNOP		s[7:0]	No Operation (has no other effect than reading out status-bits)	
SXOSCON		s[7:0]	Turn on the crystal oscillator. If this instruction is executed when the XOSC is already on, the instruction has no effect. This instruction can only be run as the first instruction after CSn has been pulled low. Must be immediately followed by a SNOP instruction in order to terminate properly.	OPERAND_ERROR
STXCAL Command strobe		s[7:0]	Enable and calibrate frequency synthesizer for TX; Go from RX / TX to a wait state where only the synthesizer is running. For test purposes only. If a frame is currently being received a RX_FRM_ABORTED exception is raised.	RX_FRM_ABORTED
SRXON Command strobe		s[7:0]	Enable RX. If a frame is currently being received a RX_FRM_ABORTED exception is raised.	RX_FRM_ABORTED
STXON Command strobe		s[7:0]	Enable TX after calibration (if not already performed) If a frame is currently being received a RX_FRM_ABORTED exception is raised.	RX_FRM_ABORTED
STXONCCA Command strobe		s[7:0]	If CCA indicates a clear channel: Enable calibration, then TX. else do nothing Also sample the value of the CCA status signal, and store in status register.	
SRFOFF Command strobe		s[7:0]	Disable RX/TX and frequency synthesizer. If RX, TX and frequency synthesizer is already off a USAGE_ERROR exception is raised and the instruction has no effect. If a frame is currently being received a RX_FRM_ABORTED exception is raised.	USAGE_ERROR RX_FRM_ABORTED

OPCODE	Inputs	Outputs	Description	Possible exceptions
SXOSCOFF Command strobe		s[7:0]	Turn off the crystal oscillator. If the RF section is not idle a USAGE_ERROR is generated. If a frame is currently being received a RX_FRM_ABORTED exception is raised.	USAGE_ERROR RX_FRM_ABORTED
SFLUSHRX Command strobe		s[7:0]	Flush the RX FIFO and reset the demodulator. If a frame is currently being received a RX_FRM_ABORTED exception is raised.	RX_FRM_ABORTED
SFLUSHTX Command strobe		s[7:0]	Flush the TX FIFO	
SACK Command strobe		s[7:0]	Send acknowledgement frame, with the frame pendig subfield cleared, following reception of the current frame. Raises USAGE_ERROR exception if a frame is currently not being received. In this case no ACK frame is sent.	USAGE_ERROR
SACKPEND Command strobe		s[7:0]	Send acknowledgement frame, with the frame pendig subfield set, following reception of the current frame. Raises USAGE_ERROR exception if a frame is currently not being received. In this case no ACK frame is sent.	USAGE_ERROR
SNACK Command strobe		s[7:0]	Do not send an acknowledgement frame to the currently received frame, even if the rfr_autoack is set. Raises USAGE_ERROR exception if a frame is currently not being received. In this case no ACK frame is sent.	USAGE_ERROR
SRXMASKBITSET Command strobe		s[7:0]	Set bit 13 in the RXMASK.	
SRXMASKBITCLR Command strobe		s[7:0]	Clear bit 13 in the RXMASK. Raises RXENABLE_ZERO exception if this causes the RXENABE registers to be zero.	RXENABLE_ZERO
RXMASKOR	d[15:0]	s[7:0]	Perform bitwise OR between RX enable mask and D.	
RXMASKAND	d[15:0]	s[7:0]	Perform bitwise AND between RX enable mask and D. Raises RXENABLE_ZERO exception if this causes the RXENABLE registers to be zero.	RXENABLE_ZERO
Data IO				
BSET	a[7:3] b[2:0]	s[7:0]	Set a single bit. Writes 1 to bit B in address A. This is done without affecting the value of, or triggering side-effects of other bits at the same address. Only the address range [0, 31] is accessible with this instruction.	MEMADDR_ERROR
BCLR	a[7:3] b[2:0]	s[7:0]	Clear a single bit. Writes 0 to bit B in address A. This is done without affecting the value of, or triggering side-effects of other bits at the same address. Only the address range [0, 31] is accessible with this instruction.	MEMADDR_ERROR
MEMRD	a[11:0]	s[7:0] d[7:0] ...	Read memory. The n'th byte of data D is read from address (A+n). Note that when an address with LSB=0 is read the content of the corresponding address with LSB=1 is buffered. If that address is read immediately after within the same MEMRD instruction, the buffered copy is read. In this way a read of a complete 16 bit word is performed as an atomic operation.	MEMADDR_ERROR
MEMWR	a[11:0] d[7:0] ...	s[7:0] d[7:0] ...	Write memory. The n'th byte of data D input with the instruction is written to address (A+n). In addition, the n'th byte of data D output from the instruction is the unaltered data read from the memory location (A+n).	MEMADDR_ERROR
REGRD	a[5:0]	s[7:0] d[7:0] ...	Same functionality as MEMRD, except the operation can only be started from addresses below 0x40.	MEMADDR_ERROR

OPCODE	Inputs	Outputs	Description	Possible exceptions
REGWR	a[5:0] d[7:0] ...	s[7:0] d[7:0] ...	Same functionality as MEMWR, except the operation can only be started from addresses below 0x40.	MEMADDR_ERROR
MEMXWR	a[11:0] d[7:0] ...	s[7:0] d[7:0] ...	XOR memory. Writes the bitwise XOR of the n't data byte D following the instruction and the current contents of address (A+n) to memory location (A+n). In addition, the n'th byte of data D output from the instruction is the unaltered data read from the memory location (A+n).	MEMADDR_ERROR
RXBUF		s[7:0] d[7:0] ...	Read the oldest byte in the RX FIFO. At the first data transfer the oldest byte in the RX FIFO is read and removed from the RX FIFO. This operation is repeated for subsequent SPI transfers. If this instruction is performed when the RX FIFO is empty, an RX_UNDERFLOW exception is raised. Note: Do not execute RXBUF while RXBUFMOV is in progress. It could result in loss of data.	RX_UNDERFLOW
RXBUFCP	a[11:0]	s[7:0] c[7:0] d[7:0] ...	This instruction functions as RXBUF except it also copies the data bytes read from the RX FIFO to the memory location starting at address A. The second byte transferred is the number of bytes, C, currently in the RX FIFO. Note: Do not execute RXBUFCP while RXBUFMOV is in progress. It could result in loss of data.	RX_UNDERFLOW
TXBUF	d[7:0] ...	s[7:0] c[7:0]	Write to the end of TX FIFO. Data bytes transferred after the opcode are appended to the end of TX FIFO. The SPI interface will output the number of bytes, C, in TX FIFO before the currently transferred byte has been entered. I.e. 0x00 is returned when transferring the first byte to TX FIFO. If this instruction is performed when the TX FIFO is full, a TX_OVERFLOW exception is raised.	TX_OVERFLOW
RANDOM	...	s[7:0] d[7:0] ...	Read randomly generated bytes D, generated from noise in the receiver chain.	
Data management instructions				
RXBUFMOV	p a[11:0] c[7:0]	s[7:0] c[7:0]	Moves the C oldest bytes from the RX FIFO to the memory location starting at address A. The priority of the instruction is defined by P, which is either low (if P=0) or high (if P=1). An RXBUFMOV_TIMEOUT exception is raised if the RX FIFO empties before the instruction is completed, as defined by DPUCON.RXTIM. The remaining bytes to be moved is available in status register. Note that running RXBUFMOV on high priority with DPUCON.RXTIM='1' will block execution of other DPU instructions while a frame is beeing received, which is more than 4ms for a 128 byte frame. A DPU_DONE_L or DPU_DONE_H exception is raised when the operation completes, depending on the priority of the instruction. This happens regardless of whether the operation was successful or not. A USAGE_ERROR exception is raised if an instruction is already active with the requested priority level (high or low).	RXBUFMOV_TIMEOUT OPERAND_ERROR USAGE_ERROR DPU_DONE_L DPU_DONE_H MEMADDR_ERROR

OPCODE	Inputs	Outputs	Description	Possible exceptions
TXBUFCP	p a[11:0] c[7:0]	s[7:0] c[7:0]	Copy C bytes of data starting from the memory location starting at address A to the end of TXBUF. The SPI interface will output the number of bytes, C, in TXBUF. The priority of the instruction is defined by P, which is either low (if P=0) or high (if P=1). If TXBUF fills before the operation is completed a TX_OVERFLOW exception is raised. The remaining bytes to be moved is available in status register. A DPU_DONE_L or DPU_DONE_H exception is raised when the operation completes, depending on the priority of the instruction. This happens regardless of whether the operation was successful or not. A USAGE_ERROR exception is raised if an instruction is already active with the requested priority level (high or low).	TX_OVERFLOW OPERAND_ERROR USAGE_ERROR DPU_DONE_L DPU_DONE_H MEMADDR_ERROR
MEMCP	p c[7:0] a[11:0] e[11:0]	s[7:0]	Copy data from one memory block to another. Copies the block of C bytes of data from the memory location starting at address A to the memory location starting at address E. The priority of the instruction is defined by P, which is either low (if P=0) or high (if P=1). A DPU_DONE_L or DPU_DONE_H exception is raised when the operation completes, depending on the priority of the instruction. This happens regardless of whether the operation was successful or not. A USAGE_ERROR exception is raised if an instruction is already active with the requested priority level (high or low).	MEMADDR_ERROR USAGE_ERROR DPU_DONE_L DPU_DONE_H
MEMCPR	p c[7:0] a[11:0] e[11:0]	s[7:0]	Copy data from one memory block to another, and revert endianess. Copies the block of C bytes of data from the memory location starting at address A to the memory location starting at address E, while reverting the endianess of the data block. I.e., data from memory location (A+n) is written to memory location (E+C-1-n). The priority of the instruction is defined by P, which is either low (if P=0) or high (if P=1). A DPU_DONE_L or DPU_DONE_H exception is raised when the operation completes, depending on the priority of the instruction. This happens regardless of whether the operation was successful or not. A USAGE_ERROR exception is raised if an instruction is already active with the requested priority level (high or low).	MEMADDR_ERROR USAGE_ERROR DPU_DONE_L DPU_DONE_H
MEMXCP	p c[7:0] a[11:0] e[11:0]	s[7:0]	XOR one memory block with another memory block. The input to the instruction are two memory blocks, both of size C bytes, starting at address A and E respectively. The output is the bitwise XOR of the two memory blocks, written to the memory location starting at address E. The priority of the instruction is defined by P, which is either low (if P=0) or high (if P=1). A DPU_DONE_L or DPU_DONE_H exception is raised when the operation completes, depending on the priority of the instruction. This happens regardless of whether the operation was successful or not. A USAGE_ERROR exception is raised if an instruction is already active with the requested priority level (high or low).	MEMADDR_ERROR DPU_DONE_L DPU_DONE_H USAGE_ERROR

OPCODE	Inputs	Outputs	Description	Possible exceptions
			Security instructions	
INC	p c[1:0] a[11:0]	s[7:0]	Increment the 2^C byte word with least significant byte at address A. The nth least significant byte beyond the least is located at address (A+n). (n' < n means n' has less significance than n) C shall be in the range 0 through 2, i.e. 1, 2 or 4 bytes are incremented. If C equals 3, a USAGE_ERROR exception shall be raised. The priority of the instruction is defined by P, which is either low (if P=0) or high (if P=1). A USAGE_ERROR exception is raised if an instruction is already active with the requested priority level (high or low). A DPU_DONE_L or DPU_DONE_H exception is raised when the operation completes, depending on the priority of the instruction. This happens regardless of whether the operation was successful or not. The instruction will always access 4 bytes regardless of the C parameter, so a MEMADDR_ERROR exception is raised if A > 0x3FC.	MEMADDR_ERROR USAGE_ERROR DPU_DONE_L DPU_DONE_H
ECB	p k[7:0] c[3:0] a[11:0] e[11:0]	s[7:0]	ECB encryption. Encrypt one 16 byte block of plaintext consisting of (16-C) bytes of data read from memory, starting at address A, concatenated with C zero-bytes, using the key stored at address (16·K) and storing the output at address E. The priority of the instruction is defined by P, which is either low (if P=0) or high (if P=1). The output is 16 AES-128 encrypted bytes. A USAGE_ERROR exception is raised if an instruction is already active with the requested priority level (high or low). A DPU_DONE_L or DPU_DONE_H exception is raised when the operation completes, depending on the priority of the instruction. This happens regardless of whether the operation was successful or not.	MEMADDR_ERROR USAGE_ERROR DPU_DONE_L DPU_DONE_H
ECBO	p k[7:0] c[3:0] a[11:0]	s[7:0]	ECB encryption. Encrypt one 16 byte block of plaintext consisting of (16-C) bytes of data read from memory, starting at address A, concatenated with C zero-bytes, using the key stored at address (16·K) and storing the output by overwriting the data from address A. The priority of the instruction is defined by P, which is either low (if P=0) or high (if P=1). The output is 16 AES-128 encrypted bytes. A USAGE_ERROR exception is raised if an instruction is already active with the requested priority level (high or low). A DPU_DONE_L or DPU_DONE_H exception is raised when the operation completes, depending on the priority of the instruction. This happens regardless of whether the operation was successful or not.	MEMADDR_ERROR USAGE_ERROR DPU_DONE_L DPU_DONE_H
ECBX	p k[7:0] c[3:0] a[11:0] e[11:0]	s[7:0]	ECB encryption and XOR. As ECB except each ciphertext byte is bitwise XOR'ed with the existing byte in the destination address E before it is written to that address.	USAGE_ERROR MEMADDR_ERROR DPU_DONE_L DPU_DONE_H

OPCODE	Inputs	Outputs	Description	Possible exceptions
CTR	p k[7:0] c[6:0] n[7:0] a[11:0] e[11:0]	s[7:0]	Encryption instruction using counter mode encryption. Process C bytes of plaintext with a starting address at A using the key stored at address (16·K), the counter stored at address (16·N) storing the output starting at address E. The priority of the instruction is defined by P, which is either low (if P=0) or high (if P=1). If the destination address E provided in the instruction equals zero, the destination address E is set equal to A, thereby replacing the plaintext directly with the ciphertext (or vice versa, in the case of an UCTR instruction). The output is C encrypted bytes processed according to 802.15.4 standard for security level 4 (CTR). A USAGE_ERROR exception is raised if an instruction is already active with the requested priority level (high or low). A DPU_DONE_L or DPU_DONE_H exception is raised when the operation completes, depending on the priority of the instruction. This happens regardless of whether the operation was successful or not.	MEMADDR_ERROR USAGE_ERROR DPU_DONE_L DPU_DONE_H
UCTR	p k[7:0] c[6:0] n[7:0] a[11:0] e[11:0]	s[7:0]	Decryption instruction using CTR mode decryption. This instruction is the same as CTR, since counter mode encryption and decryption are symmetrical operations.	MEMADDR_ERROR USAGE_ERROR DPU_DONE_L DPU_DONE_H
CBCMAC	p k[7:0] c[6:0] a[11:0] e[11:0] m[2:0]	s[7:0]	Authentication instruction using CBC-MAC security. Process C bytes of plaintext starting at address A, using the key stored at address (16·K), storing the output starting at address E. The priority of the instruction is defined by P, which is either low (if P=0) or high (if P=1). If the destination address E provided in the instruction equals zero, the destination address E is set equal to (A + C), thereby writing the output directly following the plaintext input data. The output is 4, 8, or 16 bytes of integrity code for instructions M[1:0] equals 1, 2, or 3 respectively. For M[1:0]=0, no integrity code output is generated. If M[2]=0, the plaintext data to be authenticated is automatically prefixed with C, as used in IEEE 802.15.4-2003. If M[2]=1, the plaintext data is not prefixed with C. This mode can be used for backwards compatibility with existing systems. A USAGE_ERROR exception is raised if an instruction is already active with the requested priority level (high or low). A DPU_DONE_L or DPU_DONE_H exception is raised when the operation completes, depending on the priority of the instruction. This happens regardless of whether the operation was successful or not.	MEMADDR_ERROR USAGE_ERROR DPU_DONE_L DPU_DONE_H OPERAND_ERROR

OPCODE	Inputs	Outputs	Description	Possible exceptions
UCBCMAC	p k[7:0] c[6:0] a[11:0] m[2:0]	s[7:0]	Reverse authentication instruction using CBC-MAC security. Process C bytes of plaintext starting at address A, using the key stored at address (16·K) The priority of the instruction is defined by P, which is either low (if P=0) or high (if P=1). The instruction generates 4, 8, or 16 bytes of integrity code (for M[1:0] equals 1, 2 or 3 respectively) and compares them to the received integrity code at address (A + C). The result (pass / fail) is stored in the AUTHSH / AUTHSL status bits for high / low priority security operations respectively. For M[1:0]=0, no integrity code checking is performed and the result will always be 'pass'. If M[2]=0, the plaintext data to be authenticated is automatically prefixed with C, as used in IEEE 802.15.4-2003. If M[2]=1, the plaintext data is not prefixed with C. This mode can be used for backwards compatibility with existing systems. A USAGE_ERROR exception is raised if an instruction is already active with the requested priority level (high or low). A DPU_DONE_L or DPU_DONE_H exception is raised when the operation completes, depending on the priority of the instruction. This happens regardless of whether the operation was successful or not.	MEMADDR_ERROR USAGE_ERROR DPU_DONE_L DPU_DONE_H
CCM	p k[7:0] c[6:0] n[7:0] a[11:0] e[11:0] f[6:0] m[1:0]	s[7:0]	Encryption and authentication instruction using CCM / CCM* security. Authenticate F bytes of plaintext starting at address A. Authenticate and encrypt C bytes starting at address (A+F). Use the key stored at address (16·K), the counter starting at address (16·N) and storing the output starting at address E. The priority of the instruction is defined by P, which is either low (if P=0) or high (if P=1). If the destination address E provided in the instruction equals zero, the destination address E is set equal to (A+F), thereby replacing the last C bytes of plaintext with the ciphertext and the integrity code. The output is C encrypted bytes followed by 0, 4, 8 or 16 bytes of integrity code for M equals 0, 1, 2 or 3 respectively. A USAGE_ERROR exception is raised if an instruction is already active with the requested priority level (high or low). A USAGE_ERROR exception is also raised if ((C+F) > 128). A DPU_DONE_L or DPU_DONE_H exception is raised when the operation completes, depending on the priority of the instruction. This happens regardless of whether the operation was successful or not.	MEMADDR_ERROR USAGE_ERROR DPU_DONE_L DPU_DONE_H

OPCODE	Inputs	Outputs	Description	Possible exceptions
UCCM	p k[7:0] c[6:0] n[7:0] a[11:0] e[11:0] f[6:0] m[1:0]	s[7:0]	Decryption and reverse authentication instruction using CCM / CCM* security. Authenticate F bytes of plaintext with a starting at address A. Decrypt and authenticate C bytes starting at address (A+F). Use the key stored at address (16·K), the counter stored at address (16·N), storing the output starting at address E. The priority of the instruction is defined by P, which is either low (if P=0) or high (if P=1). The output is C plaintext bytes. Note that for the authentication part of the instruction to succed, these bytes should be written back to the address the ciphertext was read from (A+F). This can easily be done by setting E=0x000. In addition, the instruction generates 0, 4, 8, or 16 bytes of encrypted integrity code (for M equals 0, 1, 2 or 3 respectively) and compares them to the stored integrity code at address (A+C+F). The result (pass / fail) is stored in the AUTHSH / AUTHSL status bits for high / low priority security operations respectively. A USAGE_ERROR exception is raised if an instruction is already active with the requested priority level (high or low). A USAGE_ERROR exception is also raised if ((C+F) > 128). A DPU_DONE_L or DPU_DONE_H exception is raised when the operation completes, depending on the priority of the instruction. This happens regardless of whether the operation was successful or not.	MEMADDR_ERROR USAGE_ERROR DPU_DONE_L DPU_DONE_H
Other				
ABORT	c[1:0]	s[7:0]	Abort ongoing data management or security instruction. c[1]=1: Abort high priority data management or security instructions c[0]=1: Abort low priority data management or security instructions c[1]=0: Don't abort high priority data management or security instructions c[0]=0: Don't abort low priority data management or security instructions Once a class of instructions is aborted, the ongoing instruction is immediately ended leaving the device state as it is at that time. Any pending data management instructions are flushed.	
SRES		s[7:0]	Reset the device except the SPI interface. This instruction can only be run as the first instruction after CSn has been pulled low.	

13.3 Instruction Set Summary

A summary of the CC2520 instruction set with op-codes is shown in the table below.

Mnemonic	Pin	Byte 1 7 6 5 4 3 2 1 0	Byte2 7 6 5 4 3 2 1 0	Byte3 7 6 5 4 3 2 1 0	Byte4 7 6 5 4 3 2 1 0	Byte5 7 6 5 4 3 2 1 0	Byte6 7 6 5 4 3 2 1 0	Byte7 7 6 5 4 3 2 1 0	Byte8 7 6 5 4 3 2 1 0	Byte9 7 6 5 4 3 2 1 0
SNOP	SI	0 0 0 0 0 0 0 0								
	SO	s s s s s s s s								
IBUFLD	SI	0 0 0 0 0 0 1 0	i i i i i i i i							
	SO	s s s s s s s s	s s s s s s s s							
SIBUFEX	SI	0 0 0 0 0 0 1 1								
	SO	s s s s s s s s								
SSAMPLECCA	SI	0 0 0 0 0 1 0 0								
	SO	s s s s s s s s								
SRES	SI	0 0 0 0 1 1 1 1	- - - - - - - -							
	SO	s s s s s s s s	s s s s s s s s							
MEMRD	SI	0 0 0 1 a a a a	a a a a a a a a	- - - - - - - -	...					
	SO	s s s s s s s s	s s s s s s s s	d d d d d d d d	...					
MEMWR	SI	0 0 1 0 a a a a	a a a a a a a a	d d d d d d d d	...					
	SO	s s s s s s s s	s s s s s s s s	d d d d d d d d	...					
RXBUF	SI	0 0 1 1 0 0 0 0	- - - - - - - -	...						
	SO	s s s s s s s s	d d d d d d d d	...						
RXBUFCP	SI	0 0 1 1 1 0 0 0	0 0 0 0 a a a a	a a a a a a a a	- - - - - - - -	...				
	SO	s s s s s s s s	c c c c c c c c	s s s s s s s s	d d d d d d d d	...				
RXBUFMOV	SI	0 0 1 1 0 0 1 p	c c c c c c c c	0 0 0 0 a a a a	a a a a a a a a					
	SO	s s s s s s s s	c c c c c c c c	s s s s s s s s	s s s s s s s s					
TXBUF	SI	0 0 1 1 1 0 1 0	d d d d d d d d	d d d d d d d d	...					
	SO	s s s s s s s s	c c c c c c c c	s s s s s s s s	...					
TXBUFCP	SI	0 0 1 1 1 1 1 p	c c c c c c c c	0 0 0 0 a a a a	a a a a a a a a					
	SO	s s s s s s s s	c c c c c c c c	s s s s s s s s	s s s s s s s s					
RANDOM	SI	0 0 1 1 1 1 0 0	- - - - - - - -	- - - - - - - -	...					
	SO	s s s s s s s s	- - - - - - - -	d d d d d d d d	...					
SXOSCON	SI	0 1 0 0 0 0 0 0								
	SO	s s s s s s s s								
STXCAL	SI	0 1 0 0 0 0 0 1								
	SO	s s s s s s s s								
SRXON	SI	0 1 0 0 0 0 1 0								
	SO	s s s s s s s s								
STXON	SI	0 1 0 0 0 0 1 1								
	SO	s s s s s s s s								
STXONCCA	SI	0 1 0 0 0 1 0 0								
	SO	s s s s s s s s								
SRFOFF	SI	0 1 0 0 0 1 0 1								
	SO	s s s s s s s s								
SXOSCOFF	SI	0 1 0 0 0 1 1 0								
	SO	s s s s s s s s								
SFLUSHRX	SI	0 1 0 0 0 1 1 1								
	SO	s s s s s s s s								
SFLUSHTX	SI	0 1 0 0 1 0 0 0								
	SO	s s s s s s s s								
SACK	SI	0 1 0 0 1 0 0 1								
	SO	s s s s s s s s								
SACKPEND	SI	0 1 0 0 1 0 1 0								
	SO	s s s s s s s s								
SNACK	SI	0 1 0 0 1 0 1 1								
	SO	s s s s s s s s								
SRXMASKBITSET	SI	0 1 0 0 1 1 0 0								
	SO	s s s s s s s s								
SRXMASKBITCLR	SI	0 1 0 0 1 1 0 1								
	SO	s s s s s s s s								
RXMASKAND	SI	0 1 0 0 1 1 1 0	d d d d d d d d	d d d d d d d d						
	SO	s s s s s s s s	s s s s s s s s	s s s s s s s s						
RXMASKOR	SI	0 1 0 0 1 1 1 1	d d d d d d d d	d d d d d d d d						
	SO	s s s s s s s s	s s s s s s s s	s s s s s s s s						
MEMCP	SI	0 1 0 1 0 0 0 p	c c c c c c c c	a a a a e e e e	a a a a a a a a	e e e e e e e e				
	SO	s s s s s s s s	s s s s s s s s	s s s s s s s s	s s s s s s s s	s s s s s s s s				
MEMCPR	SI	0 1 0 1 0 0 1 p	c c c c c c c c	a a a a e e e e	a a a a a a a a	e e e e e e e e				
	SO	s s s s s s s s	s s s s s s s s	s s s s s s s s	s s s s s s s s	s s s s s s s s				
MEMXCP	SI	0 1 0 1 0 1 0 p	c c c c c c c c	a a a a e e e e	a a a a a a a a	e e e e e e e e				
	SO	s s s s s s s s	s s s s s s s s	s s s s s s s s	s s s s s s s s	s s s s s s s s				
MEMXWR	SI	0 1 0 1 0 1 1 0	0 0 0 0 a a a a	a a a a a a a a	d d d d d d d d	...				
	SO	s s s s s s s s	s s s s s s s s	s s s s s s s s	d d d d d d d d	...				
BCLR	SI	0 1 0 1 1 0 0 0	a a a a a b b b							
	SO	s s s s s s s s	s s s s s s s s							
BSET	SI	0 1 0 1 1 0 0 1	a a a a a b b b							
	SO	s s s s s s s s	s s s s s s s s							
CTR / UCTR	SI	0 1 1 0 0 0 0 p	k k k k k k k k	0 c c c c c c c	n n n n n n n n	a a a a e e e e	a a a a a a a a	e e e e e e e e		
	SO	s s s s s s s s	s s s s s s s s	s s s s s s s s	s s s s s s s s	s s s s s s s s	s s s s s s s s	s s s s s s s s		
CBCMAC	SI	0 1 1 0 0 1 0 p	k k k k k k k k	0 c c c c c c c	a a a a e e e e	a a a a a a a a	e e e e e e e e	0 0 0 0 0 m m m		
	SO	s s s s s s s s	s s s s s s s s	s s s s s s s s	s s s s s s s s	s s s s s s s s	s s s s s s s s	s s s s s s s s		
UCBCMAC	SI	0 1 1 0 0 1 1 p	k k k k k k k k	0 c c c c c c c	0 0 0 0 a a a a	a a a a a a a a	0 0 0 0 0 m m m			
	SO	s s s s s s s s	s s s s s s s s	s s s s s s s s	s s s s s s s s	s s s s s s s s	s s s s s s s s			
CCM	SI	0 1 1 0 1 0 0 p	k k k k k k k k	0 c c c c c c c	n n n n n n n n	a a a a e e e e	a a a a a a a a	e e e e e e e e	0 f f f f f f f	0 0 0 0 0 0 m m
	SO	s s s s s s s s	s s s s s s s s	s s s s s s s s	s s s s s s s s	s s s s s s s s	s s s s s s s s	s s s s s s s s	s s s s s s s s	s s s s s s s s
UCCM	SI	0 1 1 0 1 0 1 p	k k k k k k k k	0 c c c c c c c	n n n n n n n n	a a a a e e e e	a a a a a a a a	e e e e e e e e	0 f f f f f f f	0 0 0 0 0 0 m m
	SO	s s s s s s s s	s s s s s s s s	s s s s s s s s	s s s s s s s s	s s s s s s s s	s s s s s s s s	s s s s s s s s	s s s s s s s s	s s s s s s s s
ECB	SI	0 1 1 1 0 0 0 p	k k k k k k k k	c c c c a a a a	a a a a a a a a	0 0 0 0 e e e e	e e e e e e e e			
	SO	s s s s s s s s	s s s s s s s s	s s s s s s s s	s s s s s s s s	s s s s s s s s	s s s s s s s s			
ECBO	SI	0 1 1 1 0 0 1 p	k k k k k k k k	c c c c a a a a	a a a a a a a a					
	SO	s s s s s s s s	s s s s s s s s	s s s s s s s s	s s s s s s s s					
ECBX	SI	0 1 1 1 0 1 0 p	k k k k k k k k	c c c c a a a a	a a a a a a a a	0 0 0 0 e e e e	e e e e e e e e			
	SO	s s s s s s s s	s s s s s s s s	s s s s s s s s	s s s s s s s s	s s s s s s s s	s s s s s s s s			
INC	SI	0 1 1 1 1 0 0 p	0 0 c c a a a a	a a a a a a a a						
	SO	s s s s s s s s	s s s s s s s s	s s s s s s s s						
ABORT	SI	0 1 1 1 1 1 1 1	0 0 0 0 0 0 c c							
	SO	s s s s s s s s	s s s s s s s s							
REGRD	SI	1 0 a a a a a a	- - - - - - - -	...						
	SO	s s s s s s s s	d d d d d d d d	...						
REGWR	SI	1 1 a a a a a a	d d d d d d d d	...						
	SO	s s s s s s s s	d d d d d d d d	...						

13.4 Status Byte

All instructions sent over the SPI to CC2520 result in a status byte being output on SO when the first byte of the instruction is clocked in on SI. The status byte is latched internally when a falling edge is detected on CSn and on the last falling edge of SCLK within each byte. The latched status value is then shifted out on the following falling SCLK edges.

The SNOP instruction can be used to read the status byte without causing any side effects.

Table 13: Status byte contents

Status byte (MSB clocked out first)		
Bit no	**Signal**	**Description**
7	XOSC stable and running	0: XOSC off or not yet stable 1: XOSC stable and running (Digital part has clock)
6	RSSI valid	0: RSSI value is not valid 1: RSSI value is valid
5	EXCEPTION channel A	0: No exceptions selected in EXCMASKAn has corresponding flag in EXCFLAGn set 1: At least one exception selected in EXCMASKAn has corresponding flag EXCFLAGn set
4	EXCEPTION channel B	0: No exceptions selected in EXCMASKBn has corresponding flag in EXCFLAGn set 1: At least one exception selected in EXCMASKBn has corresponding flag EXCFLAGn set
3	DPU H active	0: No high priority DPU instruction is currently active. 1: A high priority DPU instruction is currently active.
2	DPU L active	0: No low priority DPU instruction is currently active. 1: A low priority DPU instruction is currently active.
1	TX active	0: Device is not in TX mode 1: Device is in TX mode
0	RX active	0: Device is not in RX mode 1: Device is in RX mode

13.5 Command Strobes

Most of the instructions in section 15.3 that are only one byte long are referred to as command strobes. There are two exceptions to this: SNOP and SXOSCON. SNOP is used to read the status byte without causing any side effects. SXOSCON turns on the crystal oscillator and must be run via the SPI. It is not possible to load SXOSCON into the instruction buffer using IBUFLD and then execute it using IBUFEX.

The command strobes can be executed by configuring GPIO pins as input in accordance to GPIO configuration table in section 12.6 and be triggered with a selected edge in the GPIOPOLARITY register. Thus SPI traffic can be omitted for command strobes.

There are also two channels, X and Y, for binding exceptions to the command strobes, so that CC2520 may automatically react to different internal events. This feature is described in more detail in section 16.1.

13.6 Command Strobe Buffer

The command strobe buffer provides another mechanism for execution of command strobes. The buffer is loaded with the help of the IBUFLD instruction sent via SPI. Once the buffer is loaded, the instruction is executed when CC2520 receives the SIBUFX strobe. The SIBUFX strobe can be triggered from any of the triggering sources (SPI, GPIO, exceptions bound to SIBUFX instruction). When the instruction in the instruction buffer has been executed, it is replaced by a SNOP instruction. If both the SIBUFEX strobe and

the IBUFLD instruction are received at the same time, the old command strobe is executed. The new strobe that the user tried to write to the buffer is lost and will never be executed.

14 Exceptions

Exceptions in CC2520 are used to indicate that different events have occurred. Exceptions are used both for error conditions such as incorrect use of the SPI and for events that are perfectly normal and expected such as transmission of a start of frame delimiter (SFD). Exception flags are stored in status registers and can be read over the SPI or observed on GPIO. To clear an exception flag, the user must write '0' to the correct bit in the status register. If the user tries to clear an exception flag in the exact same clock period as the same exception occurs, the flag will not be cleared.

Table 14 shows a summary of the available exceptions in CC2520. The NUM column shows how the exceptions are numbered. The number correspond to the bits in the EXCFLAGn registers, and must be used when binding exceptions to instructions.

Table 14: Exceptions summary

Mnemonic	Num (hex)	Description
RF_IDLE	0x00	The main radio FSM enters its idle state from any other state. This exception is not generated when the FSM enters the idle state because of a device reset.
TX_FRM_DONE	0x01	TX frame successfully transmitted, which means that TX FIFO is empty and no underflow occurred. Exception is not generated when TX is aborted with SRFOFF, SRXON or STXON.
TX_ACK_DONE	0x02	ACK frame successfully transmitted. Exception is not generated when the acknowledge transmission is aborted with SRFOFF, SRXON or STXON.
TX_UNDERFLOW	0x03	Underflow has occurred in the TX FIFO. TX is aborted and the TX FIFO must be flushed.
TX_OVERFLOW	0x04	An attempt was made to write to TX FIFO while it is full. The instruction is aborted.
RX_UNDERFLOW	0x05	An attempt has been made to read the RX FIFO without any bytes available to read. Instruction is aborted. Note that the RX_UNDERFLOW exception should only be used for debugging software, and should not be trusted in a RX FIFO readout routine. In some scenarios the RX_UNDERFLOW exception will not be issued when a reading starts even when the RX_FIFO is empty.
RX_OVERFLOW	0x06	An attempt has been made by RF_core to write to RX FIFO while the RX FIFO is full. The byte that was attempted written to the RX FIFO is lost. Reception of data is aborted and the FSM enters the rx_overflow state. Recommended action is to issue a SFLUSHRX command strobe to empty the RX FIFO and restart RX.
RXENABLE_ZERO	0x07	RX enable register has changed value to all zeros.
RX_FRM_DONE	0x08	A complete frame has been received. I.E the number of bytes set by the length field is received.
RX_FRM_ACCEPTED	0x09	When frame filtering is enabled, this exception is generated when a frame is accepted (happens immediately after receiving the fields required to determine the outcome).
SRC_MATCH_DONE	0x0A	When source address matching is enabled, this exception is generated upon completion of source address matching. The exception is generated regardless of the result.
SRC_MATCH_FOUND	0x0B	If a source match is found, this exception is generated immediately before SRC_MATCH_DONE.
FIFOP	0x0C	The RX FIFO is filled up with bytes that have passed address filtering to the FIFOP threshold value defined in register, or at least one complete frame has been written to the RX FIFO. High when FFCTRL is in the rx_overflow state.
SFD	0x0D	Start of frame delimiter received when in RX or start of frame delimiter transmitted when in TX.
DPU_DONE_L	0x0E	Low priority DPU operation completed. Will not be issued if operation fails or is aborted.

Mnemonic	Num (hex)	Description
DPU_DONE_H	0x0F	High priority DPU operation completed. Will not be issued if operation fails or is aborted.
MEMADDR_ERROR	0x10	An illegal address has been used for an instruction. Instruction is aborted.
USAGE_ERROR	0x11	Instruction performed in a context that does not permit this instruction. Instruction is aborted.
OPERAND_ERROR	0x12	Wrong format for instruction. Instruction is aborted. This will happen for a multi-byte fixed-length instruction if CSn is raised on a byte boundary but before the required number of operands has been transferred.
SPI_ERROR	0x13	An SPI transfer was aborted by raising CSn in the middle of a byte. (I.e. not on a byte boundary)
RF_NO_LOCK	0x14	If no lock has been found before 256 us after entering RX this exception will go active. Also a negative edge on LOCK_STATUS when in RX will trigger this exception.
RX_FRM_ABORTED	0x15	Frame reception aborted. Not issued when RX_OVERFLOW occurs.
RXBUFMOV_TIMEOUT	0x16	RXBUFMOV has timed out. There were not enough bytes available in the RX FIFO and the wait time set by DPUCON.RXTIMEOUT has expired.
UNUSED	0x17	Reserved

14.1 Exceptions on GPIO Pins

All exception flags can be routed individually to a GPIO pin by writing the CTRLn value corresponding to the desired exception in Table 8 into the GPIOCTRLn registers.

CC2520 has two exception channels, A and B, that let the user select a collection of exceptions to combine to output on a GPIO pin. If any of the selected exceptions goes active, the GPIO pin goes active. It is also possible to output the complementary collection of exceptions of each of the two channels.

Example: Collect RF_IDLE and RX_UNDERFLOW in exception channel B and output on GPIO3.

- Write 0x22 to GPIOCTRL3. Set GPIO3 as output and select exception channel B from the GPIO configuration table in section 12.6.
- Write 0x21 to EXCMASKB0. Select RF_IDLE and RX_UNDERFLOW exceptions in accordance with table Exceptions overview (section 16).
- Write 0x00 to EXCMASKB1. Mask all other exceptions.
- Write 0x00 to EXCMASKB2. Mask all other exceptions.

The complementary exception channel B with the settings in the example above will include all other exceptions than RF_IDLE and RX_UNDERFLOW. This channel can be routed to another GPIO pin by writing 0x24 to the corresponding GPIOCTRLn register.

Exceptions linked to GPIO pins separately or as a group in a channel will be consistent with the corresponding bits in the EXCFLAGn registers. EXCFLAGn register bits that are high can only be cleared by writing zero to the bit.

14.2 Predefined Exception Channels

There are two predefined exception channels that can be observed on GPIO pins. They are not included in the status byte and no complementary channel is available.

The first predefined exception channel is a collection of exceptions that indicate that something has gone wrong during RX.

- RX_UNDERFLOW
- RX_OVERFLOW
- RX_FRM_ABORTED
- RXBUFMOV_TIMEOUT

The second predefined exception channel includes exceptions that indicate general error conditions.

- MEMADDR_ERROR
- USAGE_ERROR
- OPERAND_ERROR
- SPI_ERROR

Figure 10 shows how the exceptions are linked to the instruction set of CC2520. Note that there are several sources that may trigger instructions. The large or-gate illustrates that it only takes one of these sources to trigger the execution of an instruction.

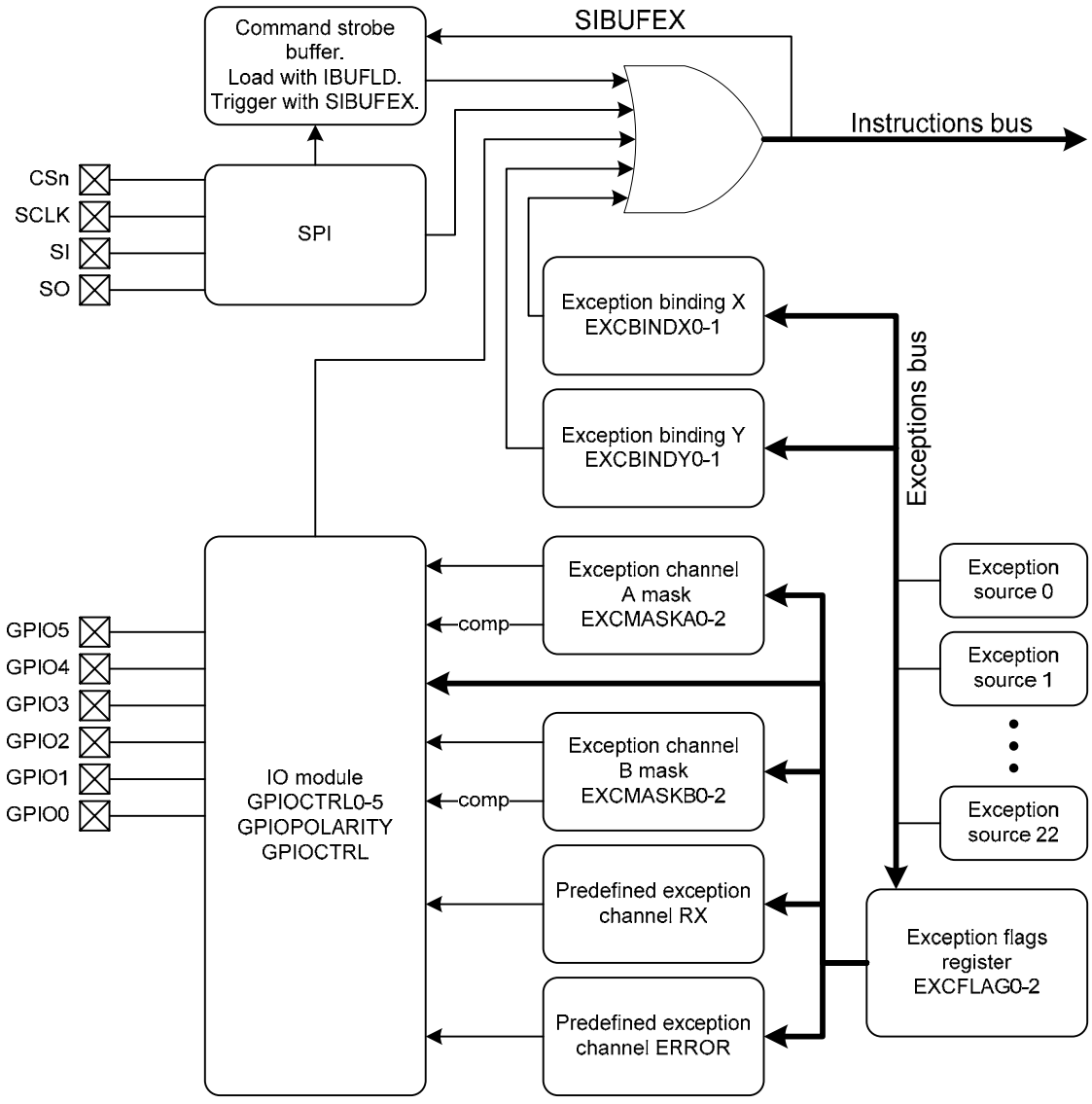

Figure 10: Functional details of exception handling and instruction triggering.

14.3 Binding Exceptions to Instructions (command strobes)

An exception can be bound to trigger a command strobe so that a command strobe can be automatically executed when an exception occurs. There are two possible binding combinations, X and Y, defined in the registers EXCBINDXn and EXCBINDYn.

Example
Run SACKPEND instruction when RX_FRM_ACCEPTED exception is activated.

1. Write 0x06 to EXCBINDX0. This will select SACKPEND as the bound instruction from Table 8: GPIO configuration.
2. Write 0x89 to EXCBINDX1. Enables X-binding and selects RX_FRM_ACCEPTED as the bound exception from Table 14: Exceptions summary.

Note
Be aware of the offset in numbering in the tables Exceptions summary (section 16) and GPIO configuration (section 12.6) for exceptions.

It is for example possible to route the exception RF_IDLE to a GPIO pin in the GPIOCTRLn.CTRLn register bit when the pin is set as output. In this case, the exception RF_IDLE has the numbering 0x01 in accordance to Table 9: GPIO configuration

When RF_IDLE is to be bound with an instruction the numbering to be used in EXCBINDX/Y1 is 0x00 in accordance to Table 14: Exceptions summary.

15 Memory Map

The configuration registers in CC2520 are located at addresses from 0x000 to 0x07F. From 0x080 to 0x0FF there is currently a reserved area that is not used. CC2520 contains 768 bytes of physical RAM located at addresses 0x100 to 0x3FF.

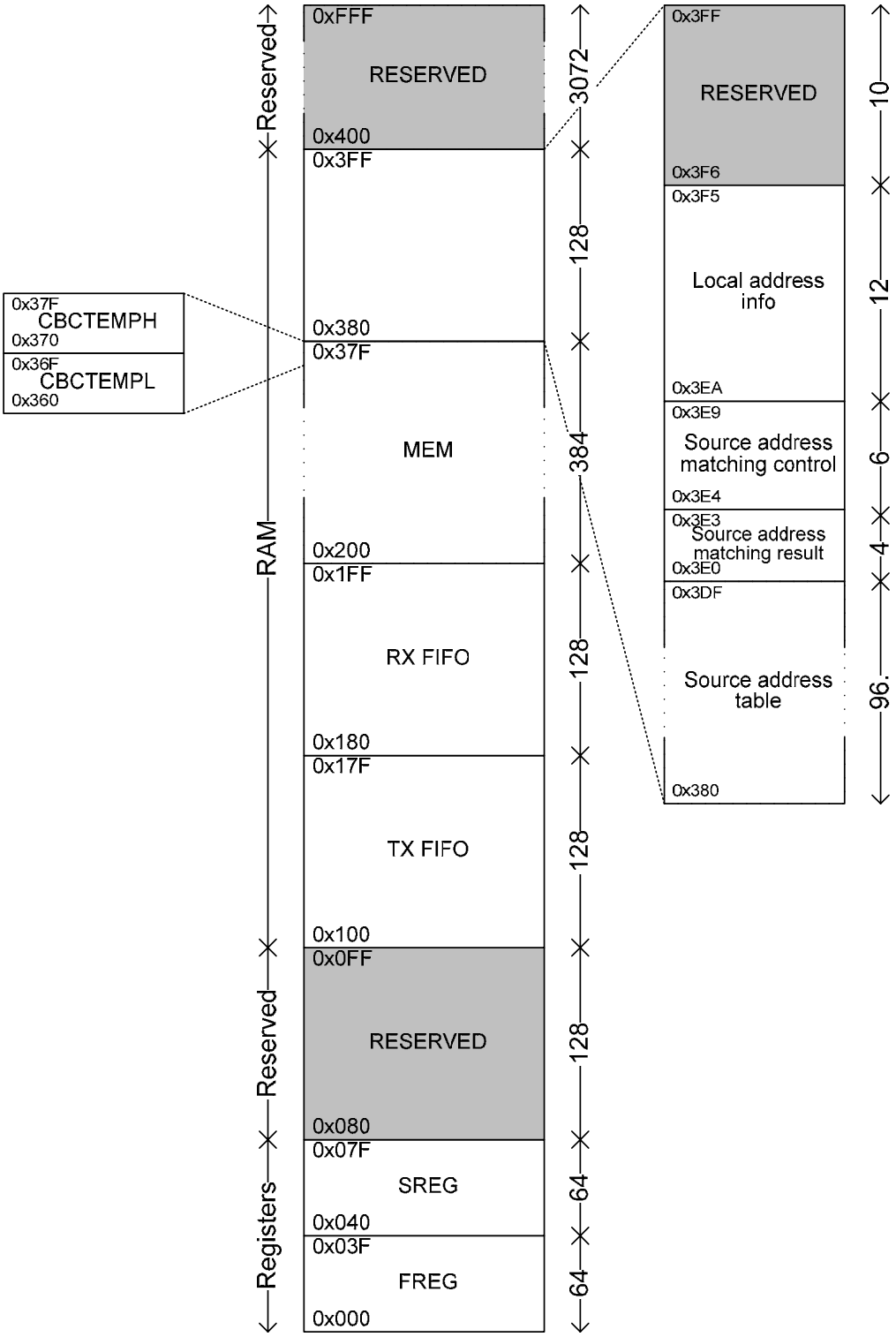

Figure 11: CC2520 memory map

15.1 FREG

FREG is 128 fast access 8-bit registers that can be reached with REGRD and REGWR instructions. REGRD and REGWR instructions that begin in the FREG memory area can be continued into the SREG and wrap around at 0x07F. FREG can also be accessed with MEMRD and MEMWR instructions which require one extra byte over the SPI with respect to REGRD and REGWR.

Registers in FREG between 0x000 and 0x01F are bit wise writeable with the BCLR and BSET instructions.

The registers located in FREG are described in section 28. Note that not all 128 addresses are used.

15.2 SREG

SREG is 128 8-bit registers that are accessible with MEMRD and MEMWR instructions.

The registers located in SREG are described in section 32. Note that not all 128 addresses are used.

15.3 TX FIFO

The TX FIFO memory area is located at addresses 0x100 to 0x17F and is thus 128 bytes. Although this memory area is intended for the TX FIFO, it is not protected in any way, so it is still accessible with for instance the MEMWR and MEMRD instructions. Normally, only the designated instructions should be used to manipulate the contents of the TX FIFO. The TX FIFO can only contain one frame at a time. More details on the TX FIFO can be found in section 22.3.

15.4 RX FIFO

The RX FIFO memory area is located at addresses 0x180 to 0x1FF and is thus 128 bytes. Although this memory area is intended for the RX FIFO, it is not protected in any way, so it is still accessible with for instance the MEMWR and MEMRD instructions. Normally, only the designated instructions should be used to manipulate the contents of the RX FIFO. The RX FIFO can contain more than one frame at a time.

15.5 MEM

The MEM memory area from address 0x200 to 0x37F is 384 bytes long. The two 16-byte temporary areas CBCTEMPH and CBCTEMPL are used for CBCMAC, UCBCMAC, CCM and UCCM instructions, with high and low priority respectively. The remaining MEM area is general purpose memory.

15.6 Frame Filtering and Source Matching Memory Map

The frame filtering and source address matching functions use a 128-byte block of CC2520 memory to store local address information and source matching configuration and results. This memory space is described in Table 15. Values that do not fill an entire byte/word are in the least significant part of the byte/word.

Table 15: Frame Filtering and Source Matching Memory map

Address	REGISTER / Variable	Endian	Description
Reserved			
0x3F6-3FF	Temporary storage		Memory space used for temporary storage of variables.
Local address information			
0x3F4-0x3F5	SHORT_ADDR	LE	The short address used during destination address filtering.
0x3F2-0x3F3	PAN_ID	LE	The PAN ID used during destination address filtering.
0x3EA-0x3F1	EXT_ADDR	LE	The IEEE extended address used during destination address filtering.
Source address matching control			

Address	REGISTER / Variable		Endian		Description
0x3E9	SRCSHORTPENDEN2				8 MSBs of the 24-bit mask that enables / disables automatic pending for each of the 24 short address.
0x3E8	SRCSHORTPENDEN1				
0x3E7	SRCSHORTPENDEN0				8 LSBs of the 24-bit mask that enables / disables automatic pending for each of the 24 short address.
0x3E6	SRCEXTPENDEN2				8 MSBs of the 24-bit mask that enables / disables automatic pending for each of the 12 extended addresses. Entry n is mapped SRCEXTPENDEN[2n]. All SRCEXTPENDEN[2n+1] bits are don't care.
0x3E5	SRCEXTPENDEN1				
0x3E4	SRCEXTPENDEN0				8 LSBs of the 24-bit mask that enables / disables automatic pending for each of the 12 extended addresses. Entry n is mapped SRCEXTPENDEN[2n]. All SRCEXTPENDEN[2n+1] bits are don't care.
Source address matching result					
0x3E3	SRCRESINDEX				The bit index of the least significant '1' in SRCRESMASK, or 0x3F when there is no source match. Upon a match, bit 5 is '0' when the match is on a short address and '1' when it is on an extended address. Upon a match, bit 6 is '1' when the conditions for automatic pending bit in acknowledgment have been met (see the description of SRCMATCH.AUTOPEND). The bit gives no indication of whether or not the acknowledgment actually is transmitted, and does not take the PENDING_OR register bit and the SACK/SACKPEND/SNACK strobes into account.
0x3E2	SRCRESMASK2				24-bit mask that indicates source address match for each individual entry in the source address table. Short address matching: When there is a match on entry panid_n + short_n, bit n will be set in SRCRESMASK. Extended address matching: When there is a match on entry ext_n, bits 2n and 2n+1 will be set in SRCRESMASK.
0x3E1	SRCRESMASK1				
0x3E0	SRCRESMASK0				
Source address table					
0x3DE-0x3DF	short_23	ext_11	LE	LE	2 individual short address entries (combination of 16 bit PAN ID and 16 bit short address) or 1 extended address entry.
0x3DC-0x3DD	panid_23		LE		
0x3DA-0x3DB	short_22		LE		
0x3D8-0x3D9	panid_22		LE		
- - - - -					
0x38E-0x38F	short_03	ext_01	LE	LE	2 individual short address entries (combination of 16 bit PAN ID and 16 bit short address) or 1 extended address entry.
0x38C-0x38D	panid_03		LE		
0x38A-0x38B	short_02		LE		
0x388-0x389	panid_02		LE		
0x386-0x387	short_01	ext_00	LE	LE	2 individual short address entries (combination of 16 bit PAN ID and 16 bit short address) or 1 extended address entry.
0x384-0x385	panid_01		LE		
0x382-0x383	short_00		LE		
0x380-0x381	panid_00		LE		

16 Frequency and Channel Programming

The carrier frequency is set by programming the 7 bit frequency word located in FREQCTRL.FREQ[6:0]. CC2520 supports carrier frequencies in the range 2394MHz to 2507MHz. The carrier frequency F_C in MHz is given by F_C = (2394 + FREQCTRL.FREQ[6:0]) MHz, and is programmable in 1 MHz steps.

IEEE 802.15.4-2006 specifies 16 channels within the 2.4 GHz band. They are numbered 11 through 26 and are 5 MHz apart. The RF frequency of channel k is given by [2].

$$F_c = 2405 + 5(k - 11) \quad [MHz] \quad k \in [11,26]$$

For operation in channel k, the FREQCTRL.FREQ register should therefore be set to FREQCTRL.FREQ = 11 + 5 (k-11)

17 IEEE 802.15.4-2006 Modulation Format

This section is meant as an introduction to the 2.4 GHz direct sequence spread spectrum (DSSS) RF modulation format defined in IEEE 802.15.4-2006. For a complete description, please refer to the standard document [2].

The modulation and spreading functions are illustrated at block level in Figure 12. Each byte is divided into two symbols, 4 bits each. The least significant symbol is transmitted first. For multi-byte fields, the least significant byte is transmitted first, except for security related fields where the most significant byte it transmitted first.

Each symbol is mapped to one out of 16 pseudo-random sequences, 32 chips each. The symbol to chip mapping is shown in Table 16. The chip sequence is then transmitted at 2 Mchips/s, with the least significant chip (C_0) transmitted first for each symbol. The transmitted bit stream and the chip sequences are observable on GPIO pins. See Table 9 for details on how to configure the GPIO to do this.

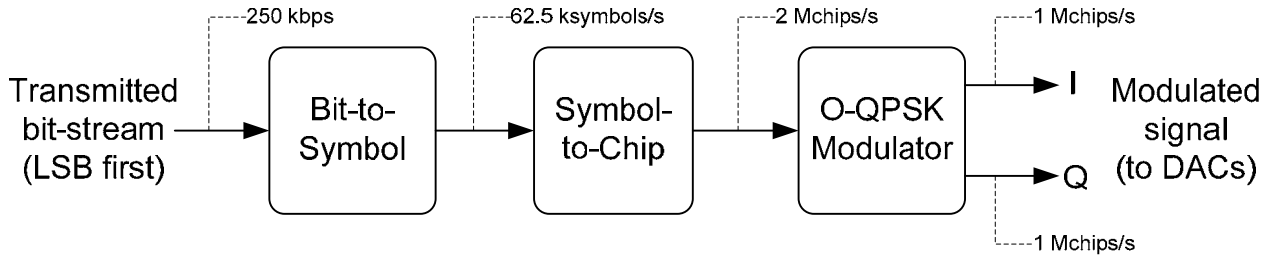

Figure 12: Modulation

Table 16: IEEE 802.15.4-2006 symbol to chip mapping

Symbol	Chip sequence (C_0, C_1, C_2, … , C_{31})
0	1 1 0 1 1 0 0 1 1 1 1 0 0 0 0 1 1 0 1 0 1 0 0 1 0 0 0 1 0 1 1 1 0
1	1 1 1 0 1 1 0 1 1 0 0 1 1 1 0 0 0 0 1 1 0 1 0 1 0 0 1 0 0 0 1 0
2	0 0 1 0 1 1 1 0 1 1 0 1 1 0 0 1 1 1 0 0 0 0 1 1 0 1 0 1 0 0 1 0
3	0 0 1 0 0 0 1 0 1 1 1 0 1 1 0 1 1 0 0 1 1 1 0 0 0 0 1 1 0 1 0 1
4	0 1 0 1 0 0 1 0 0 0 1 0 1 1 1 0 1 1 0 1 1 0 0 1 1 1 0 0 0 0 1 1
5	0 0 1 1 0 1 0 1 0 0 1 0 0 0 1 0 1 1 1 0 1 1 0 1 1 0 0 1 1 1 0 0
6	1 1 0 0 0 0 1 1 0 1 0 1 0 0 1 0 0 0 1 0 1 1 1 0 1 1 0 1 1 0 0 1
7	1 0 0 1 1 1 0 0 0 0 1 1 0 1 0 1 0 0 1 0 0 0 1 0 1 1 1 0 1 1 0 1
8	1 0 0 0 1 1 0 0 1 0 0 1 0 1 1 0 0 0 0 0 0 1 1 1 0 1 1 1 1 0 1 1
9	1 0 1 1 1 0 0 0 1 1 0 0 1 0 0 1 0 1 1 0 0 0 0 0 0 1 1 1 0 1 1 1
10	0 1 1 1 1 0 1 1 1 0 0 0 1 1 0 0 1 0 0 1 0 1 1 0 0 0 0 0 0 1 1 1
11	0 1 1 1 0 1 1 1 1 0 1 1 1 0 0 0 1 1 0 0 1 0 0 1 0 1 1 0 0 0 0 0
12	0 0 0 0 0 1 1 1 0 1 1 1 1 0 1 1 1 0 0 0 1 1 0 0 1 0 0 1 0 1 1 0
13	0 1 1 0 0 0 0 0 0 1 1 1 0 1 1 1 1 0 1 1 1 0 0 0 1 1 0 0 1 0 0 1
14	1 0 0 1 0 1 1 0 0 0 0 0 0 1 1 1 0 1 1 1 1 0 1 1 1 0 0 0 1 1 0 0
15	1 1 0 0 1 0 0 1 0 1 1 0 0 0 0 0 0 1 1 1 0 1 1 1 1 0 1 1 1 0 0 0

The modulation format is Offset – Quadrature Phase Shift Keying (O-QPSK) with half-sine chip shaping. This is equivalent to MSK modulation. Each chip is shaped as a half-sine, transmitted alternately in the I and Q channels with one half chip period offset. This is illustrated for the zero-symbol in Figure 13.

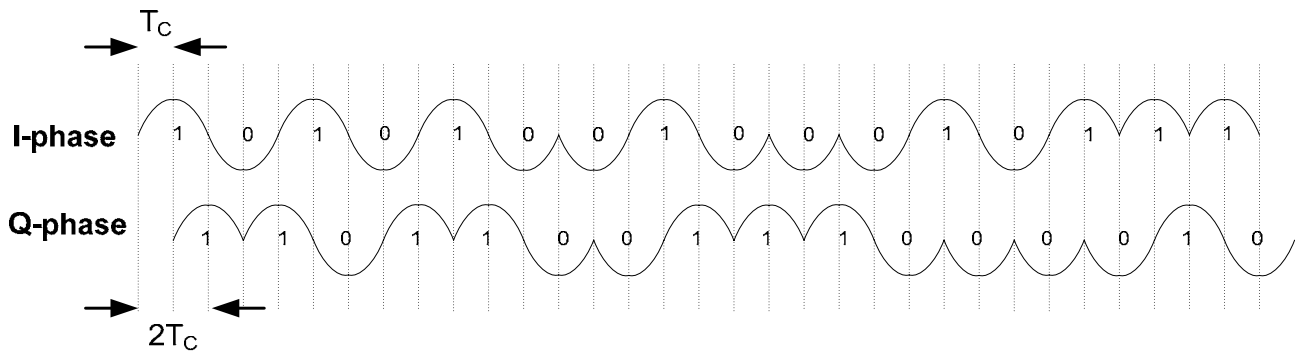

Figure 13: I / Q Phases when transmitting a zero-symbol chip sequence, T_C = 0.5 µs

18 IEEE 802.15.4-2006 Frame Format

This section gives a brief summary of the IEEE 802.15.4 frame format [2]. CC2520 has built in support for processing of parts of the frame. This is described in the following sections.

Figure 18 shows a schematic view of the IEEE 802.15.4 frame format. Similar figures describing specific frame formats (data frames, beacon frames, acknowledgment frames and MAC command frames) are included in the standard document [2].

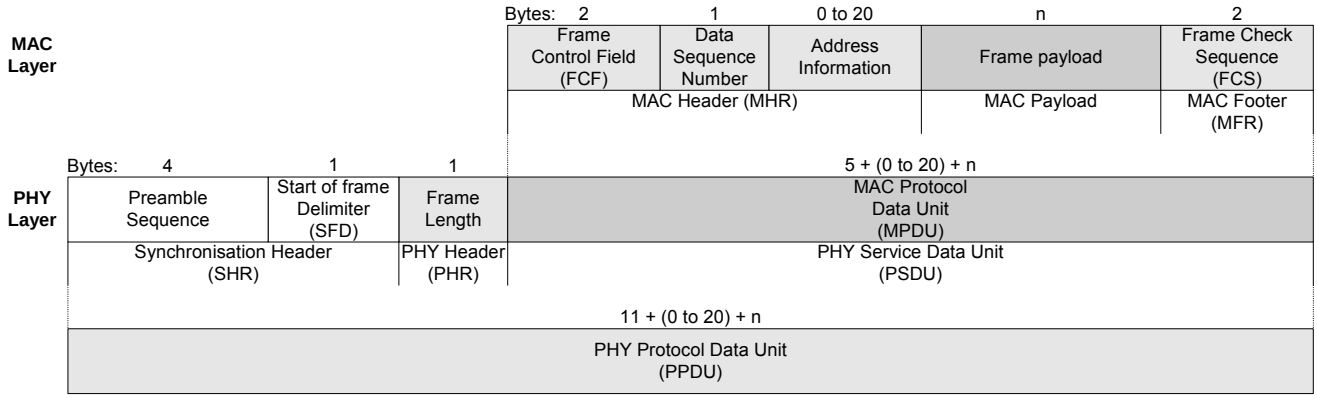

Figure 14: Schematic view of the IEEE 802.15.4 Frame Format [1]

18.1 PHY Layer

Synchronization Header
The synchronization header (SHR) consists of the preamble sequence followed by the start of frame delimiter (SFD). In the IEEE 802.15.4 specification [2], the preamble sequence is defined to be 4 bytes of 0x00. The SFD is one byte with value 0xA7.

PHY Header
The PHY header consists only of the frame length field. The frame length field defines the number of bytes in the MPDU. Note that the value of the length field does not include the length field itself. It does however include the FCS (Frame Check Sequence), even if this is inserted automatically by CC2520 hardware.

The frame length field is 7 bits long and has a maximum value of 127. The most significant bit in the length field is reserved, and should always be set to zero.

PHY Service Data Unit
The PHY Service Data Unit contains the MAC Protocol Data Unit (MPDU). It is the MAC layer's responsibility to generate/interpret the MPDU, and CC2520 has built in support for processing of some of the MPDU subfields.

18.2 MAC Layer

The FCF, data sequence number and address information follows the length field as shown in Figure 14. Together with the MAC data payload and Frame Check Sequence, they form the MPDU. The format of the FCF is shown in Figure 15. For full details, please refer to the IEEE 802.15.4 specification [2].

Bits: 0-2	3	4	5	6	7-9	10-11	12-13	14-15
Frame Type	Security Enabled	Frame Pending	Acknowledge request	Intra PAN	Reserved	Destination addressing mode	Reserved	Source addressing mode

Figure 15: Format of the Frame Control Field (FCF)

Frame Check Sequence

A 2-byte frame check sequence (FCS) follows the last MAC payload byte as shown in Figure 14. The FCS is calculated over the MPDU, i.e. the length field is not part of the FCS.

The FCS polynomial defined in [2] is

$$G(x) = x^{16} + x^{12} + x^5 + 1$$

CCC2520 supports automatic calculation/verification of the FCS. See sections 20.3 and 22.1.3 for details.

19 Transmit Mode

This section describes how to control the transmitter, the integrated frame processing and how to use the TX FIFO.

19.1 TX Control

CC2520 has many built in features for frame processing and status reporting. Note that CC2520 provides features that make it easy for the microcontroller to have precise control of the timing of outgoing frames. This is very important in an IEEE 802.15.4/ZigBee system, because there are strict timing requirements to such systems.

Frame transmission will be started by the following actions:

- The STXON command strobe
  - The SAMPLED_CCA signal is not updated.
- The STXONCCA command strobe, provided that the CCA signal is high.
  - Aborts ongoing transmission/reception and forces a TX calibration followed by transmission.
  - The SAMPLED_CCA signal is updated

Clear channel assessment is described in detail in section 19.7.

Frame transmission will be aborted by the following command actions:

- The SRXON command strobe
  - Aborts ongoing transmission and forces a RX calibration
- The SRFOFF command strobe
  - Aborts ongoing transmission/reception and forces the FSM to the IDLE state.
- The STXON command strobe
  - See above.

To enable the receiver after transmission with STXON, the FRMCTRL1.SET_RXENMASK_ON_TX bit should be set. This will set bit 14 in RXENABLE when STXON is executed. When transmitting with STXONCCA, the receiver would be on before the transmission and will be turned back on afterwards (unless the RXENABLE registers have been cleared in the mean time).

19.2 TX State Timing

Transmission of preamble begins 192 us after the STXON or STXONCCA command strobe. This is referred to as "TX turnaround time" in [2]. There is an equal delay when returning to receive mode.

When returning to idle or receive mode, there is a 2 us delay while the modulator ramps down the signals to the DACs. The down ramping happens automatically after the complete MPDU (as defined by the length byte) has been transmitted or if TX underflow occurs. This affects:

- The SFD signal, which is stretched by 2 us.
- The radio FSM transition to the IDLE state, which is delayed by 2 us.

19.3 TX FIFO Access

The TX FIFO can hold 128 bytes and only one frame at a time. The frame can be buffered before or after the TX command strobe is executed, as long as it does not generate TX underflow (see the error conditions listed below).

Figure 16 illustrates what needs to be written to the TX FIFO (marked blue). Additional bytes are ignored, unless TX overflow occurs (see the error conditions listed below).

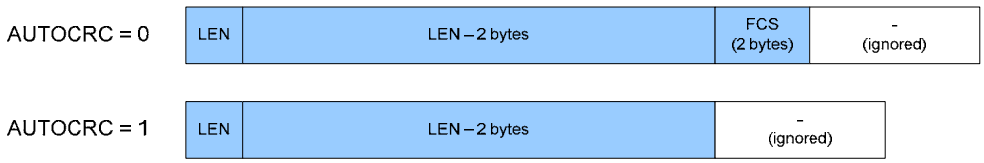

Figure 16. Frame data written to the TX FIFO

There are three ways to write to the TX FIFO:

- The TXBUF instruction transfers bytes from the microcontroller to the TX FIFO in CC2520.
- The TXBUFCP instruction copies bytes from the general RAM in CC2520 into the TX FIFO.
- Frame buffering always begins at the start of the TX FIFO memory. By enabling the FRMCTRL1.IGNORE_TX_UNDERF bit, it is possible to MEMWR, MEMCP and other memory instructions to write the frame. Note, however, that using dedicated TXBUF and TXBUFCP instructions should be preferred.

The number of bytes in the TX FIFO is stored in the TXFIFOCNT register.

The TX FIFO can be emptied manually with the SFLUSHTX command strobe. TX underflow will occur If the FIFO is emptied during transmission.

19.3.1 Retransmission

In order to support simple retransmission of frames, the CC2520 does not delete TX FIFO contents as they are transmitted. After a frame has been successfully transmitted, the FIFO contents are left unchanged. To retransmit the same frame again, simply restart TX by issuing a STXON or STXONCCA command strobe.

If a different frame is to be transmitted, just write the new frame to the TX FIFO. In this case, the TX FIFO is automatically flushed before the actual writing takes place.

19.3.2 Error Conditions

There are two error conditions associated with the TX FIFO:

- Overflow happens when the TX FIFO is full and it is attempted to write another byte.
- Underflow happens when the TX FIFO is empty and CC2520 attempts to fetch another byte for transmission.

TX overflow is indicated by the TX_OVERFLOW exception. When this error occurs, the writing will be aborted, i.e. the data byte that caused the overflow will be lost. The error condition must be cleared with the SFLUSHTX strobe.

TX underflow is indicated by the TX_UNDERFLOW exception. When this error occurs, the ongoing transmission is aborted. The error condition must be cleared with the SFLUSHTX strobe.

The TX_UNDERFLOW exception can be disabled by setting the FRMCTRL1.IGNORE_TX_UNDERF bit. In this case, the CC2520 will continue transmitting the bytes that happen to be in the TX FIFO memory, until the number of bytes given by the first byte (i.e. the length byte) has been transmitted

19.4 TX Flow Diagram

Figure 17 summarizes the previous sections in a flow diagram:

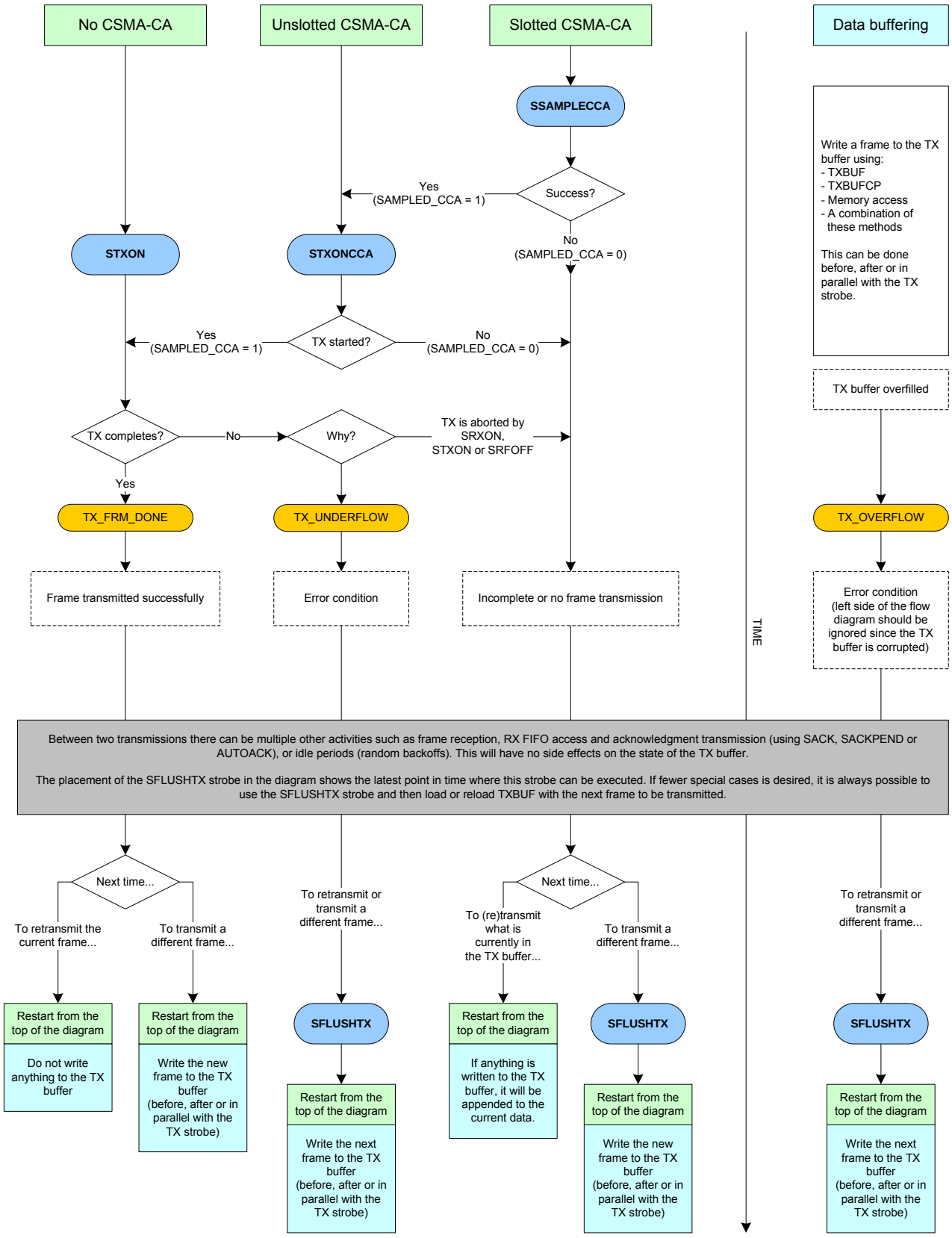

Figure 17: TX flow

19.5 Frame Processing

CC2520 performs the following frame generation tasks for TX frames:

1. Generation and automatic transmission of the PHY Layer synchronization header which consists of the preamble and the SFD.
2. Transmission of the number of bytes specified by the frame length field.
3. Calculation of and automatic transmission of the FCS (can be disabled).

The recommended usage is to write the length field followed by MAC header and MAC payload to the TX FIFO, and let CC2520 handle the rest. Note that the length field must include the two FCS bytes even though CC2520 adds these automatically.

19.5.1 Synchronization Header

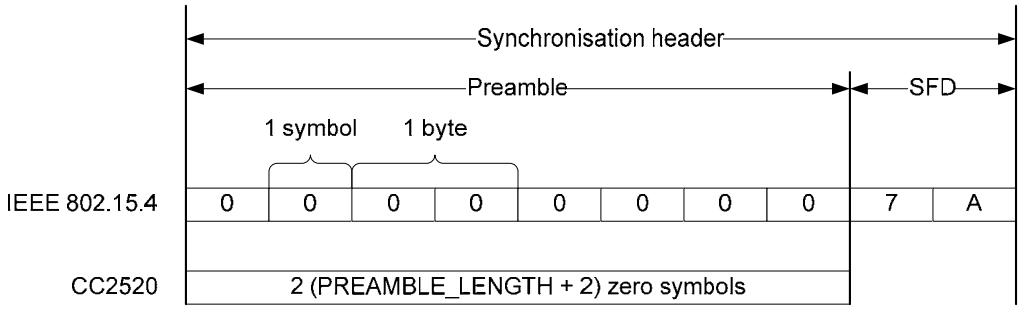

Figure 18: Transmitted Synchronisation Header

CC2520 has programmable preamble length. The default value is compliant with [2] and changing the value will make the system non-compliant to IEEE 802.15.4.

The preamble sequence length is set by MDMCTRL0.PREAMBLE_LENGTH. Figure 18 shows how the CC2520 synchronization header relates to the IEEE 802.15.4 specification.

When the required number of preamble bytes have been transmitted, CC2520 will automatically transmit the one byte long SFD. The SFD is fixed and it is not possible to change this value from software.

19.5.2 Frame Length Field

When the SFD has been transmitted, the modulator in CC2520 will start to read data from the TX FIFO. It expects to find the frame length field followed by MAC header and MAC payload. The frame length field is used to determine how many bytes that is to be transmitted.

Note that the minimum frame length is 3 when AUTOCRC=’1’ and 1 when AUTOCRC=’0’.

19.5.3 Frame Check Sequence

When the FRMCTRL0.AUTOCRC control bit is set, the FCS field is automatically generated by CC2520 and appended to the transmitted frame at the position defined by the length field. The FCS is not written to the TXFIFO, but stored in a separate 16-bit register. It is recommended to always have AUTOCRC enabled, except possibly for debug purposes. If FRMCTRL0.AUTOCRC=’0’ then the modulator will expect to find the

FCS in the TX FIFO, so software must generate the FCS and write it to the TX FIFO along with the rest of the MPDU.

The CC2520 hardware implementation of the FCS calculator is shown in Figure 22. Please refer to [2] for further details.

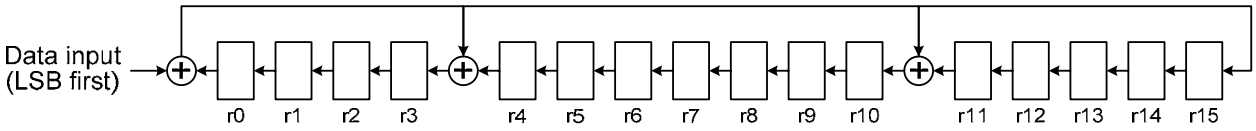

Figure 19: CC2520 FCS hardware implementation

19.6 Exceptions

The SFD exception will be raised when the SFD field of the frame has been transmitted. At the end of the frame, the TX_FRM_DONE exception will be raised when the complete frame has been successfully transmitted.

Note that there is a second SFD signal available on GPIO (config value 0x2A) that should not be confused with the SFD exception.

19.7 Clear Channel Assessment

The clear channel assessment (CCA) status signal indicates whether the channel is available for transmission or not. The CCA function is used to implement the CSMA-CA functionality specified in the IEEE 802.15.4 specification [2]. The CCA signal is valid when the receiver has been enabled for at least 8 symbol periods. The RSSI_VALID status signal can be used to verify this.

The CCA is based on the RSSI value and a programmable threshold. The exact behavior is configurable in the CCACTRL0 and CCACTRL1 registers.

There are two variations of the CCA signal, one that is updated at every new RSSI sample and one that is only updated on SSAMPLECCA and STXONCCA command strobes. They are both available in the FSMSTAT1 register.

Note that the CCA signal is updated 4 clock cycles (32 MHz) after the RSSI_VALID signal has been set.

19.8 Output Power Programming

The RF output power of CC2520 is controlled by the 7 bit value in the TXPOWER register. Table 17 shows the typical output power and current consumption for the recommended settings when the centre frequency is set to 2440 GHz. Note that the recommended settings are only a small subset of all the possible register settings. Using other settings than those in Table 17 might result in very high current consumption and generally poor performance. Please refer to section 5.11 for details on the optional temperature compensated TX.

Table 17: Output power and current consumption measured on the CC2520 reference design @ +3.0 V, +25°C, f_c=2.440 GHz

TXPOWER register (hex)	Typical output power (dBm)	Typical current consumption (mA)
F7	5	33.6
F2	3	31.3
AB	2	28.7
13	1	27.9
32	0	25.8
81	-2	24.9
88	-4	23.1
2C	-7	19.9
03	-18	16.2

19.9 Tips And Tricks

- Trigger the STXON and STXONCCA strobes from GPIO pins. This gives the microcontroller very accurate control of the timing of the outgoing frame.
- Use a timer in the microcontroller to capture the timing of the SFD exception. This gives the microcontroller exact knowledge of when the frame was transmitted.
- Note that there is no requirement to have the complete frame in the TXFIFO before starting a transmission. Bytes may be added to the TX FIFO during transmission.
- It is possible to make CC2520 transmit non-IEEE 802.15.4 compliant frames by setting MDMTEST1.MODULATION_MODE='1'.

20 Receive Mode

This section describes how to control the receiver, integrated RX frame processing, and how use the RX FIFO.

20.1 RX Control

The CC2520 receiver is turned on and off with the SRXON and SRFOFF command strobes, and with the RXENABLE registers. The command strobes provide a "hard" on/off mechanism, while RXENABLE manipulation provides a "soft" on/off mechanism.

The receiver will be turned **on** by the following actions:

- The SRXON strobe:
  - Sets RXENABLE[15]
  - Aborts ongoing transmission/reception by forcing a transition to RX calibration.
- The STXON strobe when FRMCTRL1.SET_RXENMASK_ON_TX is enabled:
  - Sets RXENABLE[14]
  - The receiver is enabled after transmission completes.
- Setting RXENABLE != 0x0000:
  - Does not abort ongoing transmission/reception.

The receiver will be turned **off** by the following actions:

- The SRFOFF strobe:
  - Clears RXENABLE[15:0]
  - Aborts ongoing transmission/reception by forcing the transition to IDLE mode.
- Setting RXENABLE = 0x0000
  - Does not abort ongoing transmission/reception. Once the ongoing transmission/reception is finished, the CC2520 will return to IDLE state.

There are several ways to manipulate the RXENABLE registers:

- The REGWR and MEMWR instructions
- The BSET and BCLR instructions
- The RXENABLEAND and RXENABLEOR instructions
- The SRXMASKBITSET and SRXMASKBITCLR strobes (affecting RXENABLE[13])
- The SRXON, SRFOFF and STXON strobes, including the FRMCTRL1.SET_RXMASK_ON_TX setting

20.2 RX State Timing

The receiver is ready 192 us after RX has been enabled by one of the methods described above. This is referred to as "RX turnaround time" in [2].

When returning to receive mode after frame reception, there is by default an interval of 192 us where SFD detection is disabled. This interval can be disabled by clearing FSMCTRL.RX2RX_TIME_OFF.

20.3 Frame Processing

CC2520 integrates critical portions of the RX requirements in IEEE 802.15.4-2003 and -2006 in hardware. This reduces the microcontroller interruption rate, simplifies the software that handles frame reception, and provides the results with minimum latency.

During reception of a single frame, the CC2520 performs the following frame processing steps:

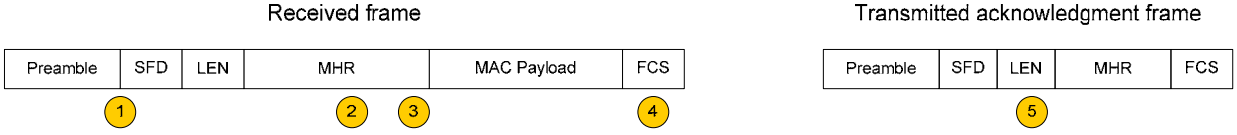

1. Detection and removal of the received PHY synchronization header (preamble and SFD), and reception of the number of bytes specified by the frame length field.
2. Frame filtering as specified by [1] and [2], section 7.5.6.2, third filtering level.
3. Matching of the source address against a table containing up to 24 short addresses or 12 extended IEEE addresses. The source address table is stored on-chip in RAM.
4. Automatic FCS checking, and attaching this result and other status values (RSSI, LQI and source match result) to received frames.
5. Automatic acknowledgment transmission with correct timing, and correct setting of the frame pending bit, based on the results from source address matching and FCS checking.

20.3.1 Synchronization Header And Frame Length Fields

Frame reception starts with detection of a start-of-frame delimiter (SFD), followed by the length byte, which determines when the reception is complete. The SFD signal, which is default output on GPIO4, can be connected to a timer input on a microcontroller to capture the start of received frames:

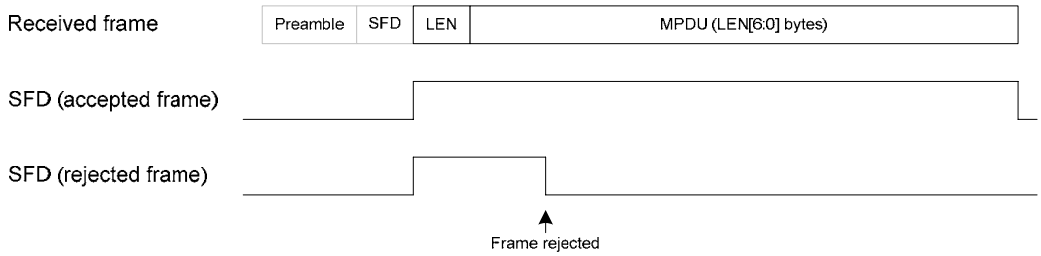

Figure 20: SFD signal timing

Preample and SFD are not written to the RX FIFO.

The CC2520 uses a correlator to detect the SFD. The correlation threshold value in MDMCTRL1.CORR_THR determines how closely the received SFD must match an "ideal" SFD. The threshold must be adjusted with care:

- If set too high, CC2520 will miss lots of actual SFDs, effectively reducing the receiver sensitivity.
- If set too low, CC2520 will detect lots of false SFDs. Although this does not reduce the receiver sensitivity, the effect will be similar, since false frames might overlap with SFDs of actual frames. It also increases the risk of receiving false frames with correct FCS.

In addition to SFD detection, it is also possible to require a number of valid preamble symbols (also above the correlation threshold) prior to SFD detection. Refer to the register descriptions of MDMCTRL0 and MDMCTRL1 for available options and recommended settings.

For CC2520 rev. A the default correlation threshold is too low, and must updated after reset (before RX is attempted).

20.3.2 Frame Filtering

The frame filtering function rejects non-intended frames as specified by [1] and [2], section 7.5.6.2, third filtering level. In addition, it provides filtering on:

- The 8 different frame types (see the FRMFILT1 register)
- The reserved bits in the frame control field (FCF)

The function is controlled by:

- The FRMFILT0 and FRMFILT1 registers
- The LOCAL_PAN_ID, LOCAL_SHORT_ADDR and LOCAL_EXT_ADDR values in RAM

Filtering Algorithm

The FRMFILT0.FRM_FILTER_EN bit controls whether frame filtering is applied or not. When disabled, the CC2520 will accept all received frames. When enabled (which is the default setting), the CC2520 will only accept frames that fulfill all of the following requirements:

- The length byte must be equal to or higher than the “minimum frame length”, which is derived from the source- and destination address mode and PAN ID compression subfields of the FCF.
- The reserved FCF bits [9:7] and’ed together with FRMFILT0.FCF_RESERVED_BITMASK must equal 0b000.
- The value of the frame version subfield of the FCF cannot be higher than FRMFILT0.MAX_FRAME_VERSION.
- The source and destination address modes cannot be reserved values (1).
- Destination address:
  - If a destination PAN ID is included in the frame, it must match LOCAL_PANID or must be the broadcast PAN identifier (0xFFFF).
  - If a short destination address is included in the frame, it must match either LOCAL_SHORT_ADDR or the broadcast address (0xFFFF).
  - If an extended destination address is included in the frame, it must match LOCAL_EXT_ADDR.
- Frame type:
  - Beacon frames (0) are only accepted when:
    - FRMFILT1.ACCEPT_FT0_BEACON = 1
    - Length byte >= 9
    - The destination address mode is 0 (no destination address)
    - The source address mode is 2 or 3 (i.e. a source address is included)
    - The source PAN ID matches LOCAL_PANID, or LOCAL_PANID equals 0xFFFF
  - Data (1) frames are only accepted when:
    - FRMFILT1.ACCEPT_FT1_DATA = 1
    - Length byte >= 9
    - A destination address and/or source address is included in the frame. If no destination address is included in the frame, the FRMFILT0.PAN_COORDINATOR bit must be set and the source PAN ID must equal LOCAL_PANID.
  - Acknowledgment (2) frames are only accepted when:
    - FRMFILT1.ACCEPT_FT2_ACK = 1
    - Length byte = 5
  - MAC command (3) frames are only accepted when:
    - FRMFILT1.ACCEPT_FT3_MAC_CMD = 1
    - Length byte >= 9
    - A destination address and/or source address is included in the frame. If no destination address is included in the frame, the FRMFILT0.PAN_COORDINATOR bit must be set and the source PAN ID must equal LOCAL_PANID for the frame to be accepted..
  - Reserved frame types (4, 5, 6 and 7) are only accepted when:
    - FRMFILT1.ACCEPT_FT4TO7_RESERVED = 1 (default is 0)
    - Length byte >= 9

The following operations are performed before the filtering begins, with no effect on the frame data stored in the RX FIFO:

- Bit 7 of the length byte is masked out (don’t care).
- If FRMFILT1.MODIFY_FT_FILTER is unlike zero, the MSB of the frame type subfield of the FCF is either inverted or forced to 0 or 1.

If a frame is rejected, CC2520 will only start searching for a new frame after the rejected frame has been completely received (as defined by the length field) to avoid detecting false SFDs within the frame. Note that rejected frames can generate RX overflow if it occurs before the frame is rejected.

Exceptions
When frame filtering is enabled and the filtering algorithm accepts a received frame, an RX_FRM_ACCEPTED exception will be generated. It will not be generated if frame filtering is disabled or RX_OVERFLOW or RX_FRM_ABORTED is generated before the filtering result is known.

Figure 24 illustrates the three different scenarios (not including the overflow and abort error conditions).

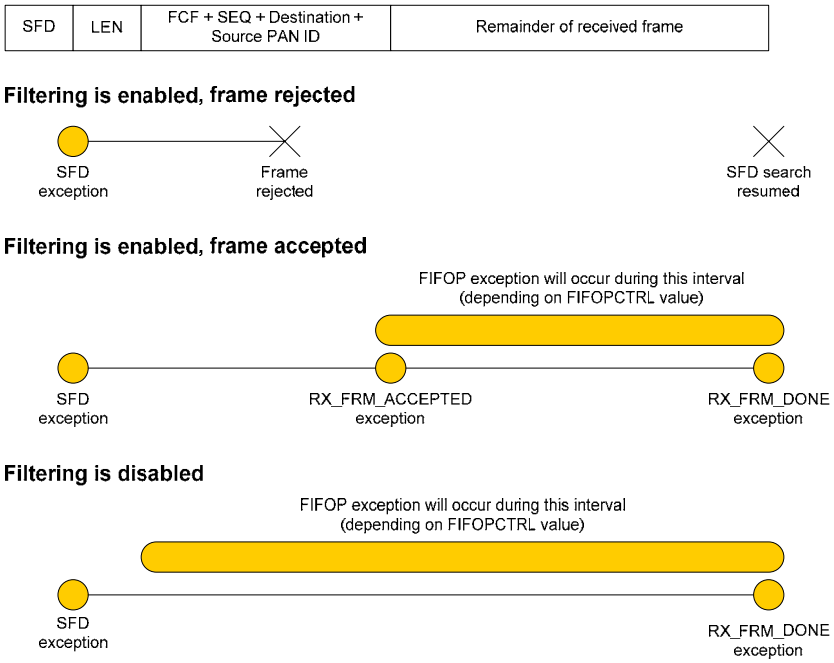

Figure 21: Filtering scenarios (exceptions generated during reception)

The FSMSTAT1.SFD register bit will go high when start of frame delimiter is completely received and remain high until either the last byte in MPDU is received or the received frame has failed to pass address recognition and been rejected.

SFD exception can be routed to a GPIO pin alone or as a part of a group of exceptions in channel A or B. SFD exception should preferably be connected to a timer capture pin on the microcontroller to extract timing information of transmitted and received data frames. SFD exception is also stored in EXCFLAG1 register. The register bit (and possibly the GPIO pin) will go high when the start of frame delimiter has been completely received and will continue to be high until cleared by SW.

Tips and Tricks
The following register settings must be configured correctly:

- FRMFILT0.PAN_COORDINATOR must be set if the device is a PAN coordinator, and cleared if not.
- FRMFILT0.MAX_FRAME_VERSION must correspond to the supported version(s) of the IEEE 802.15.4 standard.
- The local address information must be loaded into RAM.

To completely avoid receiving frames during energy detection scanning, set FRMCTRL0.RX_MODE = 0b11 and then (re)start RX. This will disable symbol search and thereby prevent SFD detection.
To resume normal RX mode, set FRMCTRL0.RX_MODE = 0b00 and (re)start RX.

During operation in a busy IEEE 802.15.4 environment, CC2520 will receive large numbers of non-intended acknowledgment frames. To effectively block reception of these frames, use the FRMFILT1.ACCEPT_FT2_ACK bit to control when acknowledgment frames should be received:

- Set FRMFILT1.ACCEPT_FT2_ACK after successfully starting a transmission with acknowledgment request, and clear the bit again after the acknowledgment frame has been received, or the timeout has been reached.
- Keep the bit cleared otherwise.

It is not necessary to turn off the receiver while changing the values of the FRMFILT0/1 registers and the local address information stored in RAM. However, if the changes take place between reception of the SFD byte and the source PAN ID (i.e. between the *SFD and RX_FRM_ACCEPTED* exceptions), the modified values must be considered as don't care for that particular frame (CC2520 will use either the old or the new value).

Note that it is possible to make CC2520 ignore all IEEE 802.15.4 incoming frames by setting MDMTEST1.MODULATION_MODE='1'.

20.3.3 Source Address Matching

CC2520 supports matching of the source address in received frames against a table stored in the on-chip memory. The table is 96 bytes long, and hence it can contain up to:

- 24 short addresses (2 + 2 bytes each)
- 12 IEEE extended addresses (8 bytes each).

Source address matching will only be performed when frame filtering is also enabled, and the received frame has been accepted. The function is controlled by:

- The SRCMATCH, SRCSHORTEN0, SRCSHORTEN1, SRCSHORTEN2, SRCEXTEN0, SRCEXTEN1 and SRCEXTEN2 registers
- The source address table in RAM.

Applications

Automatic acknowledgment transmission with correct setting of the frame pending bit: When using indirect frame transmission, the devices will send data requests to poll frames stored on the coordinator. To indicate whether it actually has a frame stored for the device, the coordinator must set or clear the frame pending bit in the returned acknowledgment frame. On most 8- and 16-bit MCUs, however, there is not enough time to determine this, and so the coordinator ends up setting the pending bit regardless of whether there are pending frames for the device (as required by IEEE 802.15.4 [2]). This is wasteful in terms of power consumption, because the polling device will have to keep its receiver enabled for a considerable period of time, even if there are no frames for it. By loading the destination addresses in the indirect frame queue into the source address table and enabling the AUTOPEND function, CC2520 will set the pending bit in outgoing acknowledgment frames automatically. This way the operation is no longer timing critical, as the effort done by the microcontroller is when adding or removing frames in the indirect frame queue and updating the source address table accordingly.

Security material look-up: To reduce the time needed to process secured frames, the source address table can be set up so the entries match the table of security keys on the microcontroller. A second level of masking on the table entries allows this application to be combined with automatic setting of the pending bit in acknowledgment frames.

Other applications: The two previous applications are the main targets for the source address matching function. However, for proprietary protocols that only rely on the basic IEEE 802.15.4 frame format, there are several other useful applications. For instance, by using it together with the exception binding mechanism, it is possible to create firewall functionality where only a specified set of nodes will be acknowledged.

The Source Address Table

The source address table begins at address 0x380 in RAM as shown in Figure 11. The space is shared between short and extended addresses, and the SRCSHORTEN0/1/2 and SRCEXTEN0/1/2 registers are used to control which entries are enabled. All values in the table are little-endian (as in the received frames).

- A *short address entry* starts with the 16-bit PAN ID followed by the 16-bit short address. These entries are stored at address 0x380 + (4 × n), where n is a number between 0 and 23.

- An *extended address entry* consists only of the 64-bit IEEE extended address. These entries are stored at address 0x380 + (8 × n), where n is a number between 0 and 11.

Address Enable Registers

Software is responsible for allocating table entries and for making sure that active short and extended address entries do not overlap. There are separate enable bits for short and extended addresses:

- Short address entries are enabled in the SRCSHORTEN0, SRCSHORTEN1 and SRCSHORTEN2 registers. Register bit **n** corresponds to short address entry **n**.
- Extended address entries are enabled in the SRCEXTEN0, SRCEXTEN1 and SRCEXTEN2 registers. In this case register bit **2n** corresponds to extended address entry **n**. This mapping is convenient when creating a combined bit vector (of short and extended enable bits) to find unused entries. Moreover, when read, register bit **2n+1** will always have the same value as register bit **2n**, since an extended address occupies the same memory as two short address entries.

Memory address	0/8	1/9	2/A	3/B	4/C	5/D	6/E	7/F
0x3D8-0x3DF	ext_11							
	panid_22		short_22		panid_23		panid_23	
0x3D0-0x3D7	ext_10							
	panid_20		short_20		panid_21		short_21	
0x3C8-0x3CF	ext_9							
	panid_18		short_18		panid_19		short_19	
0x3C0-0x3C7	ext_8							
	panid_16		short_16		panid_17		short_17	
0x3B8-0x3BF	ext_7							
	panid_14		short_14		panid_15		short_15	
0x3B0-0x3B7	ext_6							
	panid_12		short_12		panid_13		short_13	
0x3A8-0x3AF	ext_5							
	panid_10		short_10		panid_11		short_11	
0x3A0-0x3A7	ext_4							
	panid_8		short_8		panid_9		short_9	
0x398-0x39F	ext_3							
	panid_6		short_6		panid_7		short_7	
0x390-0x397	ext_2							
	panid_4		short_4		panid_5		short_5	
0x388-0x38F	ext_1							
	panid_2		short_2		panid_3		short_3	
0x380-0x387	ext_0							
	panid_0		short_0		panid_1		short_1	

SRCSHORTEN2 = 0x1C

SRCEXTEN2 = 0xC3

SRCSHORTEN1 = 0x10

SRCEXTEN1 = 0x03

SRCSHORTEN0 = 0x0B

SRCEXTEN0 = 0xF0

Figure 22 - Example of enabled table entries

Matching Algorithm

The SRCMATCH.SRC_MATCH_EN bit controls whether source address matching is enabled or not. When enabled (which is the default setting) and a frame passes the filtering algorithm, the CC2520 will apply one of the algorithms outlined in Figure 22, depending on which type of source address is present.

The result is reported in two different forms:

- A 24-bit vector called SRCRESMASK contains a '1' for each enabled short entry with a match, or two '1's for each enabled extended entry with a match (the bit mapping is the same as for the address enable registers upon read access).
- A 7-bit value called SRCRESINDEX:
  - When no source address is present in the received frame, or there is no match on the received source address:
    - Bits 6:0: 0x3F
  - If there is a match on the received source address:
    - Bits 4:0: The index of the first entry (i.e. the one with the lowest index number) with a match, 0-23 for short addresses or 0-11 for extended addresses.
    - Bit 5: '0' if the match is on a short address, '1' if the match is on an extended address.
    - Bit 6: The result of the AUTOPEND function

Short Source Address (mode 2)
The received source PAN ID is called srcPanid.
The received short address is called srcShort.

```
SRCRESMASK = 0x000000;
SRCRESINDEX = 0x3F;
for (n = 0; n < 24; n++) {
    bitVector = 0x000001 << n;
    if (SRCSHORTEN & bitVector) {
        if ((panid[n] == srcPanid) &&
            (short[n] == srcShort)) {
            SRCRESMASK |= bitVector;
            if (SRCRESINDEX == 0x3F) {
                SRCRESINDEX = n;
            }
        }
    }
}
```

Extended Source Address (mode 3)
The received extended address is called srcExt.

```
SRCRESMASK = 0x000000;
SRCRESINDEX = 0x3F;
for (n = 0; n < 12; n++) {
    bitVector = 0x000003 << (2*n);
    if (SRCEXTEN & bitVector) {
        if (ext[n] == srxExt) {
            SRCRESMASK |= bitVector;
            if (SRCRESINDEX == 0x3F) {
                SRCRESINDEX = n | 0x20;
            }
        }
    }
}
```

Figure 23 - Matching algorithm for short and extended addresses

SRCRESMASK and SRCRESINDEX are written to CC2520 memory as soon as the result is available. SRCRESINDEX is also appended to received frames if the FRMCTRL0.AUTOCRC and FRMCTRL0.APPEND_DATA_MODE bits have been set. The value then replaces the 7-bit LQI value of the 16-bit status word.

Exceptions

When source address matching is enabled and the matching algorithm completes, a *SRC_MATCH_DONE* exception will be generated, regardless of the result. If a match is found, a *SRC_MATCH_FOUND* exception will also be generated, immediately before *SRC_MATCH_DONE*.

Figure 24 illustrates the timing of these exceptions:

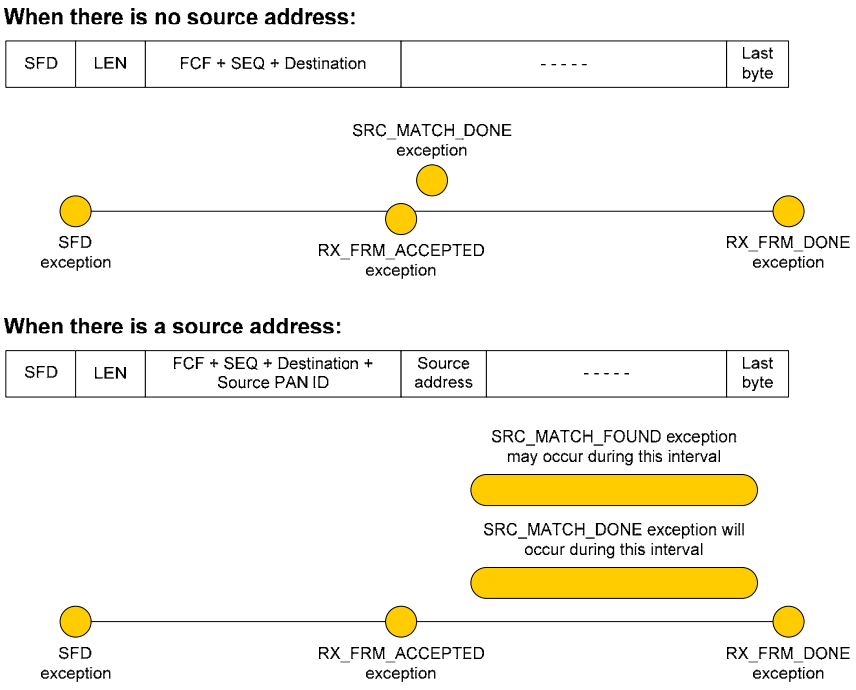

Figure 24 - Exceptions generated by source address matching

Tips and Tricks

- The source address table can be modified safely during frame reception. If one address replaces another while the receiver is active, the corresponding enable bit should be turned off during the modification. This will prevent CC2520 from using a combination of old and new values, because it will only consider entries that are enabled throughout the whole source matching process.

The following measures can be taken to avoid that the next received frame overwrites the results from source address matching:

- Use the appended SRCRESINDEX result instead of the value written to RAM (this is the recommended approach).
- Read the results from RAM before RX_FRM_ACCEPTED occurs in the next received frame. For the shortest frame type this will happen after the sequence number, so the total available time (absolute worst-case with a small safety margin) becomes:

  16 µs (required preamble) + 32 µs (SFD) + 128 µs (4 bytes) = 176 µs

- To increase the available time, clear the FSMCTRL.RX2RX_TIME_OFF bit. This will add another *192 µs*, for a total of *368 µs*. This will also reduce the risk of RX overflow.

20.3.4 Frame Check Sequence

In receive mode the FCS is verified by hardware if FRMCTRL0.AUTOCRC is enabled. The user is normally only interested in the correctness of the FCS, not the FCS sequence itself. The FCS sequence itself is therefore not written to the RX FIFO during receive. Instead, when FRMCTRL0.AUTOCRC is set the two FCS bytes are replaced by other more useful values. Which values that are substituted for the FCS sequence is configurable in the FRMCTRL0 register.

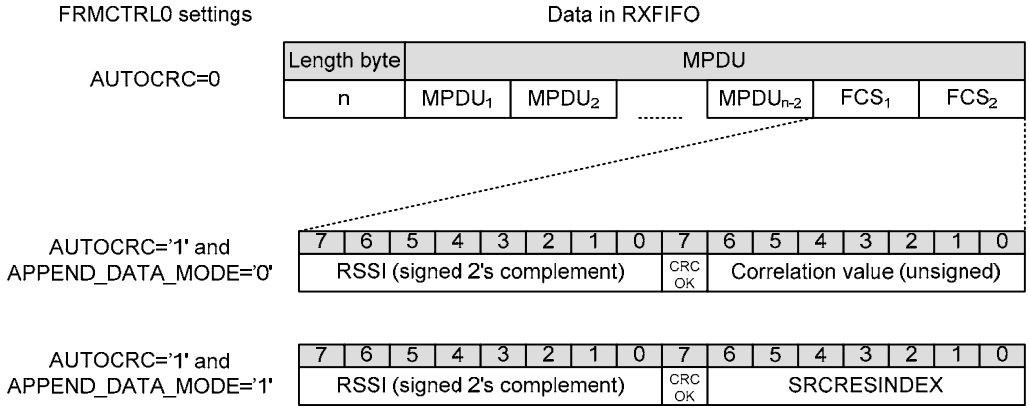

Figure 25: Data in RX FIFO for different settings.

Field descriptions:

- The *RSSI* value is measured over the first 8 symbols following the SFD.
- The *CRC_OK* bit indicates whether the FCS is correct (1) or incorrect (0). When incorrect, software is responsible for discarding the frame.
- The *correlation value* is the average correlation value over the 8 first symbols following the SFD.
- *SRCRESINDEX* is the same value that is written to RAM after completion of source address matching.

Calculation of the LQI value used by IEEE 802.15.4 is described in section 20.5.

20.3.5 Acknowledgement Transmission

CC2520 includes hardware support for acknowledgment transmission after successful frame reception (i.e. the FCS of the received frame must be correct). Figure 26 shows the format of the acknowledgment frame

Bytes:	4	1	1	2	1	2
	Preamble Sequence	Start of Frame Delimiter (SFD)	Frame Length	Frame Control Field (FCF)	Data Sequence Number	Frame Check Sequence (FCS)
	Synchronisation Header (SHR)		PHY Header (PHR)	MAC Header (MHR)		MAC Footer (MFR)

Figure 26. Acknowledge frame format

There are three variable fields in the generated acknowledgment frame:

- The pending bit, which may be controlled with command strobes and the AUTOPEND feature
- The data sequence number (DSN), which is taken automatically from the last received frame
- The FCS, which is given implicitly.

There are three different sources for setting the pending bit in an ACK frame (i.e. the SACKPEND strobe, the PENDING_OR register bit and the AUTOPEND feature). The pending bit is set if one or more of these sources are set.

Transmission Timing

Acknowledgment frames can only be transmitted immediately after frame reception. The transmission timing is controlled by the FSMCTRL.SLOTTED_ACK bit:

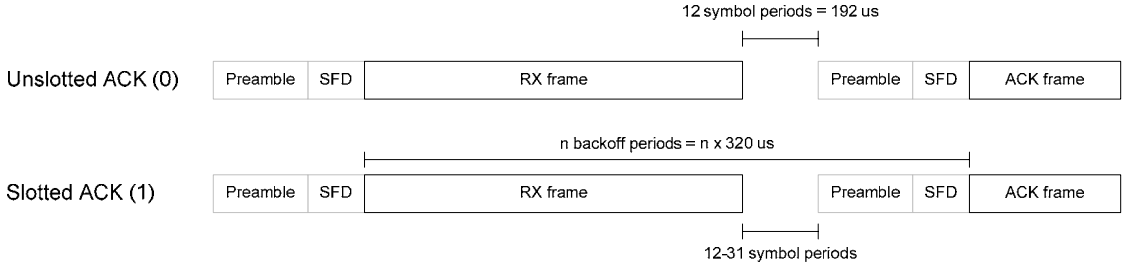

Figure 27: Acknowledgement timing

802.15.4 requires unslotted mode in non-beacon enabled PANs, and slotted mode for beacon-enabled PANs.

Manual Control

The SACK, SACKPEND and SNACK command strobes can only be issued during frame reception. If the strobes are issued at any other time, they will have no effect but generating a USAGE_ERROR exception:

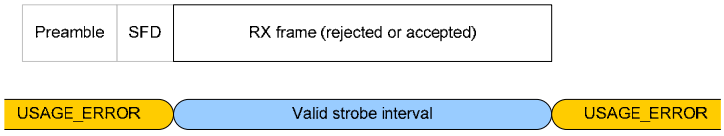

Figure 28: Command strobe timing

The command strobes may be issued several times during reception, however, only the last strobe will have an effect:

- No strobe / SNACK / incorrect FCS: No acknowledgment transmission
- SACK: Acknowledgment transmission with the frame pending bit cleared
- SACKPEND: Acknowledgment transmission with the frame pending bit set

Automatic Control (AUTOACK)
When FRMFILT0.FRM_FILTER_EN and FRMCTRL0.AUTOACK are both enabled, the CC2520 will determine automatically whether or not to transmit acknowledgment frames:

- The RX frame must be accepted by frame filtering (indicated by the RX_FRM_ACCEPTED exception)
- The acknowledgment request bit must be set in the RX frame
- The RX frame must not be a beacon or an acknowledgment frame
- The FCS of the RX frame must be correct

Automatic acknowledgments can be overridden by the SACK, SACKPEND and SNACK command strobes. For instance, if the microcontroller is low on memory resources and cannot store a received frame, the SNACK strobe can be issued during reception and prevent acknowledging the discarded frame.

By default, the AUTOACK feature never sets the frame pending bit in the acknowledgment frames. Apart from manual override with command strobes, there are two options:

- Automatic control, using the AUTOPEND feature
- Manual control, using the FRMCTRL1.PENDING_OR bit

Automatic Setting of the Frame Pending Field (AUTOPEND)
When the SRCMATCH.AUTOPEND bit is set, the result from source address matching determines the value of the frame pending field. Upon reception of a frame, the frame pending field in the (possibly) returned acknowledgment will be set, given that:

- FRMFILT0.FRAME_FILTER_EN is set.
- SRCMATCH.SRC_MATCH_EN is set.
- SRCMATCH.AUTOPEND is set.
- The received frame matches the current SRCMATCH.PEND_DATAREQ_ONLY setting.
- The received source address matches at least one source match table entry, which is enabled in both SRCSHORTEN and SRCSHORTPENDEN, or SRCEXTEN and SRCEXTPENDEN.

If the source matching table runs full, the FRMCTRL1.PENDING_OR bit may be used to override the AUTOPEND feature and temporarily acknowledge all frames with the frame pending field set.

20.4 RX FIFO Access

The RX FIFO can hold one or more received frames, provided that the total number of bytes is 128 or less. There are two ways to determine the number of bytes in the RX FIFO:

- Reading RXFIFOCNT register
- Using the FIFOP and FIFO signals in combination with the FIFOPCTRL.FIFOPTHR setting

There are several ways to access the RX FIFO:

- The RXBUF instruction transfers received bytes from CC2520 to the microcontroller
- The RXBUFCP instruction transfers received bytes from CC2520 to the microcontroller and makes a copy of the read bytes in CC2520 RAM
- The RXBUFMOV instruction transfers received bytes from the RX FIFO to CC2520 RAM
- The RXFIRST register allows software to peek at the head byte in the RX FIFO

The SFLUSHRX command strobe resets the RX FIFO, removing all received frames, and clearing all counters, status signals and sticky error conditions.

20.4.1 Using the FIFO and FIFOP Signals

The FIFO and FIFOP signals are useful when reading out received frames in small portions while the frame is received:

- The FIFO signal (default output on GPIO1) goes high when there is one or more bytes in the RX FIFO, but low when RX overflow has occurred.
- The FIFOP signal (default output on GPIO2) goes high when

- The number of valid bytes in the RX FIFO exceeds the FIFOP threshold value programmed into FIFOPCTRL. When frame filtering is enabled, the bytes in the frame header are not considered as valid until the frame has been accepted.
- The last byte of a new frame is received, even if the FIFOP threshold is not exceeded. If so, FIFOP will go back low at the next RX FIFO read access.

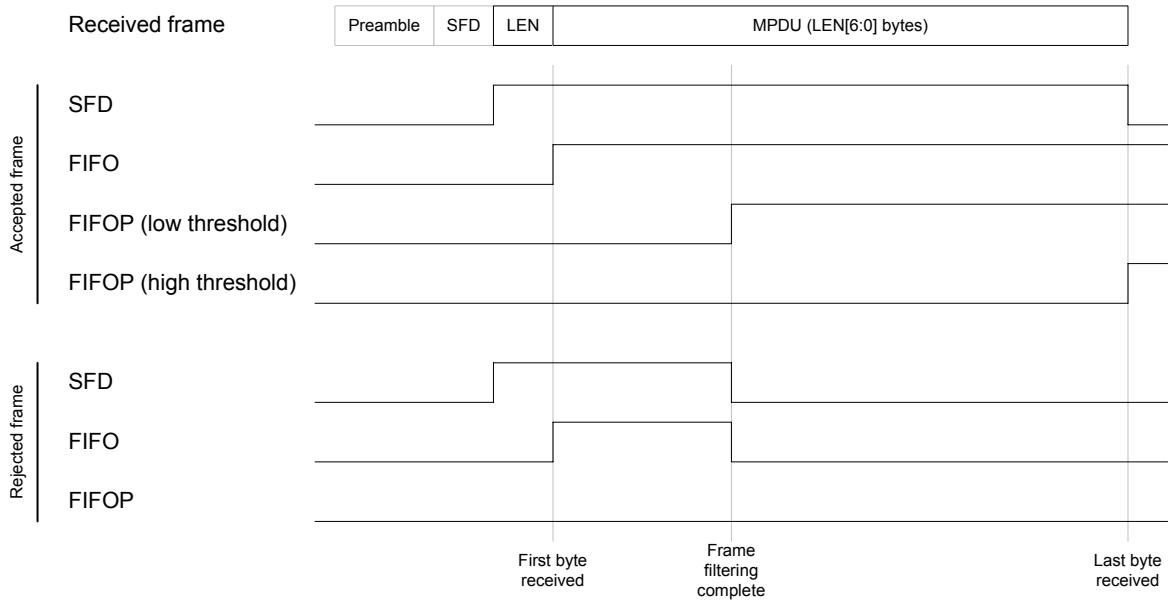

Figure 29: Behavior of FIFO and FIFOP signals.

When using the FIFOP signal as an interrupt signal for the microcontroller, the FIFOP threshold should be adjusted by the interrupt service routine to prepare for the next interrupt. When preparing for the last interrupt for a frame, the threshold should match the number of bytes remaining.

20.4.2 Error Conditions

There are two error conditions associated with the RX FIFO:

- Overflow, in which case the RX FIFO is full when another byte is received
- Underflow, in which case software attempts to read a byte from an empty RX FIFO

RX overflow is indicated by the RX_OVERFLOW exception and by the signal values FIFO = 0 and FIFOP = 1. When the error occurs, frame reception will be halted. The frames currently stored in the RX FIFO may be read out before the condition is cleared with the SFLUSHRX strobe. Note that rejected frames can generate RX overflow if the condition occurs before the frame is rejected.

RX underflow is indicated by the RX_UNDERFLOW exception. RX underflow is a serious error condition that should not occur in error-free software, and the RX_UNDERFLOW exception should only be used for debugging or in a "watchdog" function. Note that the RX_UNDERFLOW exception will not be generated when the read operation occurs simultaneously with reception of a new byte.

20.5 RSSI

CC2520 has a built-in RSSI (Received Signal Strength Indication) which calculates an 8 bit signed digital value that can be read from a register or automatically appended to received frames. The RSSI value is the result of averaging the received power over 8 symbol periods (128 µs) as specified by IEEE 802.15.4 [2].

The RSSI value is a 2's complement signed number on a logarithmic scale with 1dB steps.

The statusbit RSSI_VALID should be checked before reading the RSSI value register. RSSI_VALID indicates that the RSSI value in the register is in fact valid, which means that the receiver has been enabled for at least 8 symbol periods.

To find the actual signal power P at the RF pins with reasonable accuracy, an offset has to be added to the RSSI value.

$$P = RSSI - OFFSET \text{ [dBm]}$$

The offset is an empirical value which is found during characterization and is approximately 76 dBm for the CC2520 reference design. E.g. reading a RSSI value of -10 from the RSSI register means that the RF input power is approximately -86 dBm.

It is configurable how CC2520 updates the RSSI register after it has first become valid. If FRMCTRL0.ENERGY_SCAN='0' (default), the RSSI register contains the latest value available, but if this bit is set to '1', a peak search is performed and the RSSI register will contain the largest value since the energy scan was enabled.

20.6 Link Quality Indication

The link quality indication (LQI) is a measurement of the strength and/or quality of the received frame as defined by the IEEE 802.15.4 standard [2]. The LQI value is required by the IEEE 802.15.4 standard [2] to be limited to the range 0 through 255, with at least 8 unique values. CC2520 does not provide a LQI value directly, but reports several measurements that can be used by the microcontroller to calculate a LQI value.

The RSSI value may be used by the MAC software to calculate the LQI value. This approach has the disadvantage that e.g. a narrowband interferer inside the channel bandwidth will increase the RSSI and thus the LQI value although it actually reduces the true link quality. CC2520 therefore also provides an average correlation value for each incoming frame, based on the 8 first symbols following the SFD. This unsigned 7-bit value can be looked upon as a measurement of the "chip error rate," although CC2520 does not do chip decision.

As described in section 20.3.4, the average correlation value for the 8 first symbols is appended to each received frame together with the RSSI and CRC OK/not OK when MDMCTRL0.AUTOCRC is set. A correlation value of ~110 indicates a maximum quality frame while a value of ~50 is typically the lowest quality frames detectable by CC2520.

Software must convert the correlation value to the range 0-255 as defined by [2], for instance by calculating:

$$LQI = (CORR - a)b$$

limited to the range 0-255, where a and b are found empirically based on PER measurements as a function of the correlation value.

A combination of RSSI and correlation values may also be used to generate the LQI value.

21 Radio Control State Machine

The FSM module is responsible for maintaining the TX FIFO and RX FIFO pointers, control of analog "dynamic" signals such as power up / power down, control of the data flow within the RF core, generation of automatic acknowledgement frames and control of all analog RF calibration.

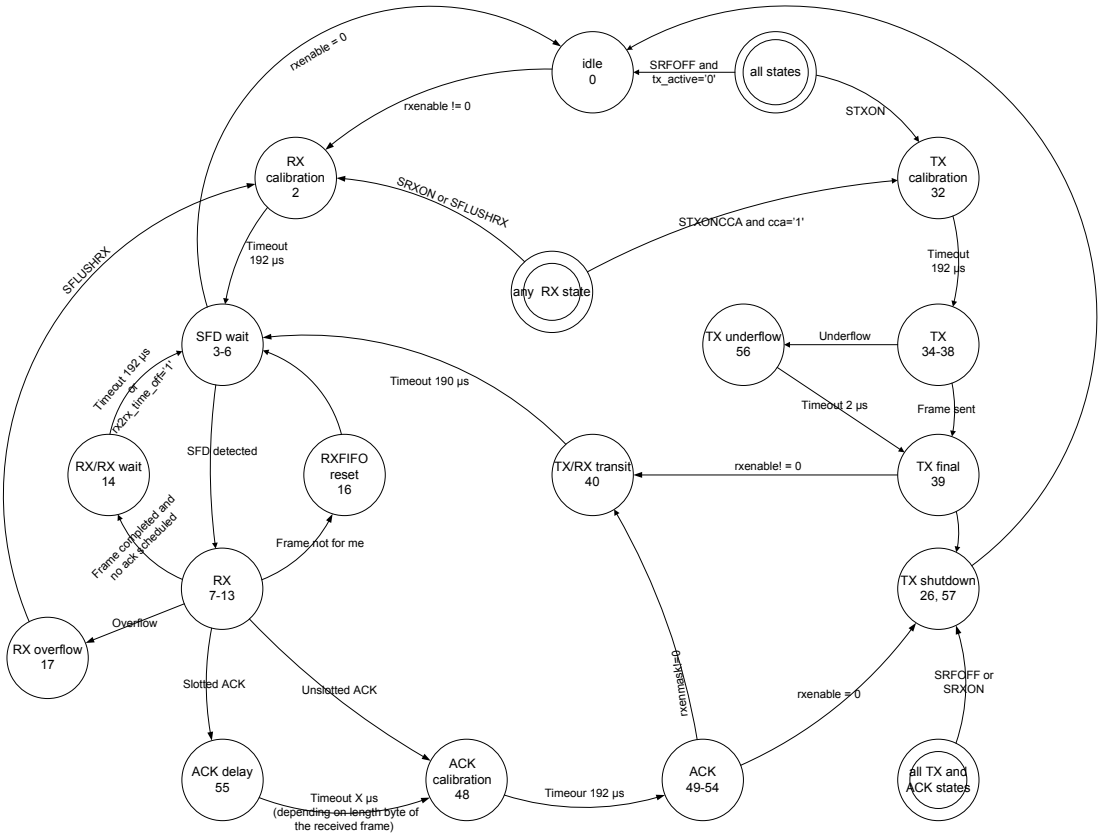

Figure 30: Main FSM

Table 18 shows the mapping from FSM state to the number which can be read from the FSMSTAT0 register. Note that although it is possible to read the state of the FSM, this information should not be used to control the program flow in the application software. The states may change very quickly (every 32 MHz clock cycle) and an 8 MHz SPI is not able to capture all the activities.

Table 18: FSM State Mapping

State name	State number decimal	Number hex	tx_active	rx_active
Idle	0	0x00	0	0
RX calibration	2	0x02	0	1
SFD wait	3 - 6	0x03 – 0x06	0	1
RX	7 - 13	0x07 – 0x0D	0	1
RX/RX wait	14	0x0E	0	1
RXFIFO reset	16	0x10	0	1
RX overflow	17	0x11	0	0

State name	State number decimal	Number hex	tx_active	rx_active
TX calibration	32	0x20	1	0
TX	34 - 38	0x22 – 0x26	1	0
TX final	39	0x27	1	0
TX/RX transit	40	0x28	1	0
ACK calibration	48	0x30	1	0
ACK	49 - 54	0x31 – 0x36	1	0
ACK delay	55	0x37	1	0
TX underflow	56	0x38	1	0
TX shutdown	26, 57	0x1A, 0x39	1	0

22 Crystal Oscillator

The internal crystal oscillator generates the main frequency reference. The reference frequency must be 32 MHz. Because the crystal frequency is used as reference for the data rate as well as other internal signal processing functions, other frequencies cannot be used.

The crystal must be connected between the XOSC32M_Q1 and XOSC32M_Q2 pins. The oscillator is designed for parallel mode operation of the crystal. In addition, loading capacitors (C121 and C131) for the crystal are required. The loading capacitor values depend on the total load capacitance, C_L, specified for the crystal. The total load capacitance seen between the crystal terminals should equal C_L for the crystal to oscillate at the specified frequency. CC2520 has the ability to add more capacitance in order to tune the oscillator frequency. The amount of extra capacitance is configurable with the FREQTUNE register.

$$C_L = C_{tune} + C_{parasitic} + \frac{1}{\frac{1}{C_{121}} + \frac{1}{C_{131}}}$$

The parasitic capacitance is constituted by pin input capacitance and PCB stray capacitance. The total parasitic capacitance is typically 2 pF - 5 pF.

Note that the default value for the FREQTUNE register means “no added capacitance”, which means that only reduction of the frequency is possible. By reducing the external capacitors (C121 and C131), the default frequency is increased. This way, the actual frequency tuning range can be moved so that both positive and negative tuning around the target frequency is possible.

The crystal oscillator is amplitude regulated. This means that a high current is used to start up the oscillations. When the amplitude builds up, the current is reduced to what is necessary to maintain a stable oscillation. This ensures a fast start-up and keeps the drive level to a minimum. The ESR of the crystal must be within the specification in order to ensure a reliable start-up.

See section 6 for crystal specific parameters (including tuning).

23 External Clock Output

CC2520 can provide a 50-50 duty cycle clock signal to external circuits. This is an advantage for low-cost systems where one wants as few components as possible, because both the microcontroller and CC2520 can run on the same crystal. CC2520 has a clock divider that can make glitch free changes between many different frequencies between 1 and 16 MHz.

After a reset, CC2520 will output a 1MHz clock on GPIO0. Note that CC2520 needs to be in active mode in order for the crystal oscillator to be running and thus have the ability to provide an external clock.

The procedure for waking a system up from LPM2 is as follows:

- MCU is running on RC oscillator, CC2520 is in LPM2
- Change CC2520 from LPM2 to active mode.
- Switch the MCU over to the 1 MHz clock that CC2520 outputs on GPIO0.
- Change to the desired clock frequency.

The procedure for bringing a system from active mode to LPM2 is as follows:

- Switch MCU over to RC oscillator.
- Set CC2520 in LPM2.

24 Random Number Generation

CC2520 can output random bits in two different ways. Common for these are that the chip should be in RX when generation of random bits are required. One must also make sure that the chip has been in RX long enough for the transients to have died out. A convenient way to do this is to wait for the RSSI valid signal to go high.

- Single random bits from either the I or Q channel (configurable) can be output on GPIO pins at a rate of 8MHz. One can also select to xor the I and Q bits before they are output on a GPIO pin. These bits are taken from the least significant bit in the I and/or Q channel after the decimation filter in the demodulator.
- CC2520 supports an instruction called RANDOM that allows the user to read randomly generated bytes over the SPI. These bytes are generated from the least significant bit of the I channel output from the channel filter in the demodulator.

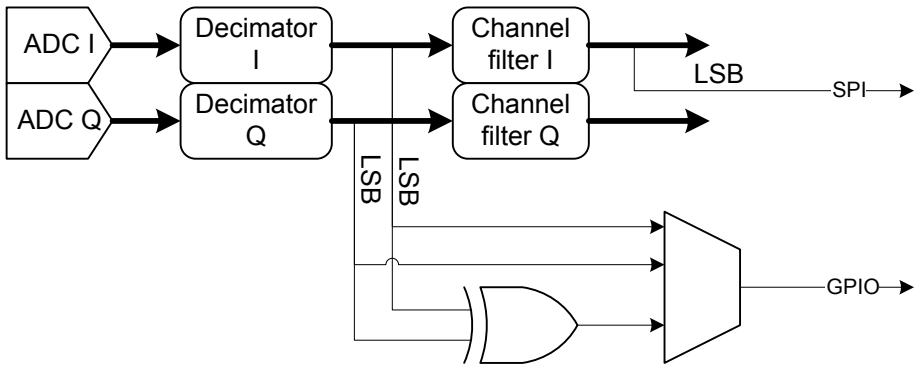

Figure 31: Random bit generation in the demodulator

A simple test of the RANDOM instruction shows satisfactory performance for most practical uses. About 20 million bytes were read using the RANDOM instruction. When interpreted as unsigned integers between 0 and 255, the mean value was 127.6518, which indicates that there is a DC component.

The FFT of the 2^{14} first bytes is shown in Figure 33. Note that the DC component is clearly visible. A histogram (32 bins) of the 20 million values is shown in Figure 34.

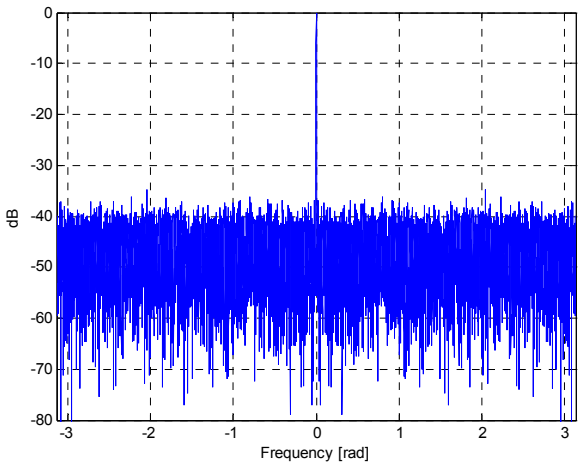

Figure 32: FFT of the random bytes

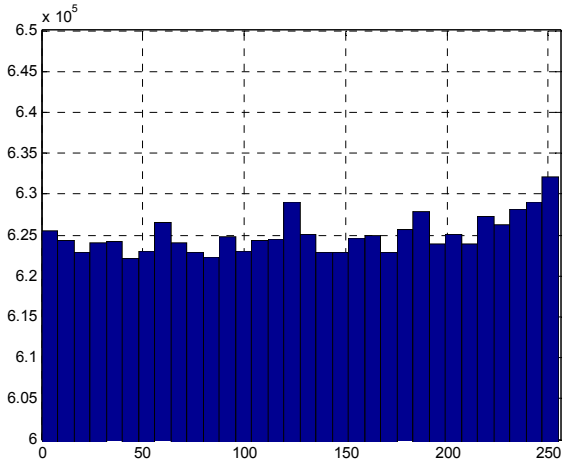

Figure 33: Histogram of 20 million bytes generated with the RANDOM instruction

For the first 20 million individual bits, the probability of a one is P(1)=0.500602 and P(0)=1-P(1)=0.499398.

Note that to fully qualify the random generator as “true random”, much more elaborate tests are required. There are software packages available on the internet that may be useful in this respect [8], [9].

25 Memory Management Instructions

CC2520 has several instructions for managing the memory contents. These instructions are supported in order to allow the user to manipulate the memory contents in a flexible way so that SPI traffic is reduced to a minimum. These instructions are particularly useful when working with secure frames.

Note that the parameters for these instructions may be set to values that make the blocks of input data and output data overlap. This is perfectly OK for all instructions except MEMCPR which will only work with overlapping input/output if C≤16. For example: to shift a 9 byte block of data one byte up, the MEMCP instructions can be used as follows: MEMCP(P=0,C=9,A=0x22A,E=0x22B).

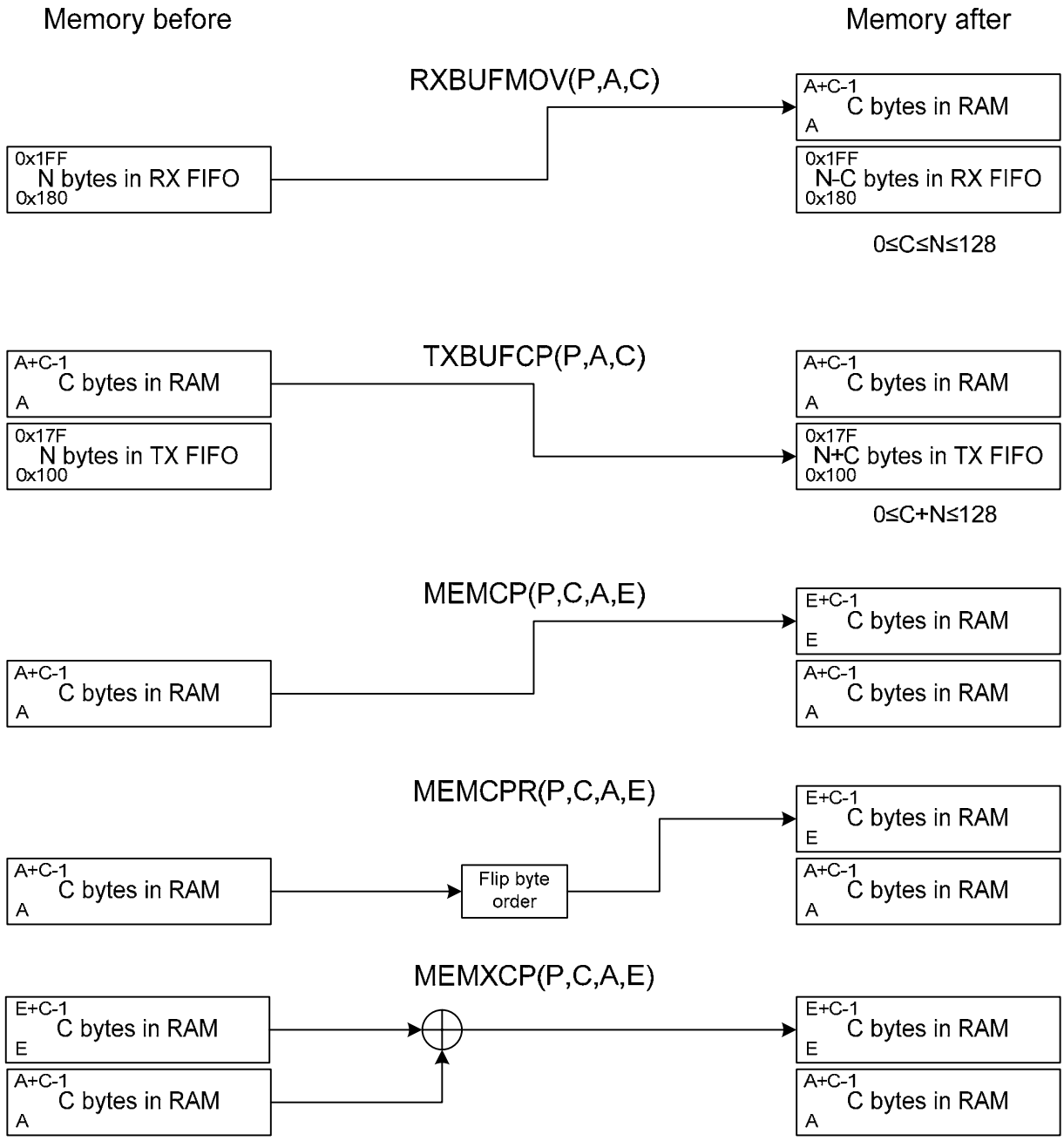

Figure 34: Illustration of the memory management instructions

25.1 RXBUFMOV

The RXBUFMOV instruction reads data from the RX FIFO and places the data at a specified memory location as illustrated in Figure 35.

25.2 TXBUFCP

The TXBUFCP instruction copies a block of data starting at a specified memory location into the TX FIFO as illustrated in Figure 35.

25.3 MEMCP

The MEMCP instruction copies a block of data starting at a specified memory location into another memory location as illustrated in Figure 35.

25.4 MEMCPR

The MEMCPR instruction copies a block of data starting at a specified memory location into another memory location while reversing the endianess. In other words the byte at memory location A+n is copied to memory location E+C-1-n.

25.5 MEMXCP

The MEMXCP instruction xors two blocks of data and writes the result back to the memory location of the second block. This is primarily used as a subroutine for some of the security instructions. It can also be used to clear (set to zero) blocks of RAM with one short SPI instruction. By using the same source and target address, the data is xor'ed with itself, which always results in zero being written back to the RAM.

26 Security Instructions

CC2520 has extensive support for security operations defined in IEEE 802.15.4. The latest specification version [2] describes only the CCM* mode of operation. CCM* uses CTR-mode encryption for confidentiality and CBC-MAC for authentication. In CC2520 these operations are available as separate instructions. In addition the basic ECB instruction is available and an instruction for manipulation of the counter used in CTR-mode encryption/decryption.

Note that all the different security operations in IEEE802.15.4 only use AES 128bit encryption. Decryption is never used and thus CC2520 only supports encryption. ECB decryption is not supported.

Note that for all the security instructions, the key and counter should reside in RAM in reversed byte order compared to the data. This can either be done by reversing the byte order of the key/counter before it is written to the RAM, or the MEMCPR instructions can be used to reverse the byte order of keys/counters that are already in the RAM.

26.1 Decoding of the Flags Field in CC2520

This section defines the security flags used during counter mode encryption and CBC-MAC mode authentication (also includes CCM*) and how these are represented in CC2520 RAM.

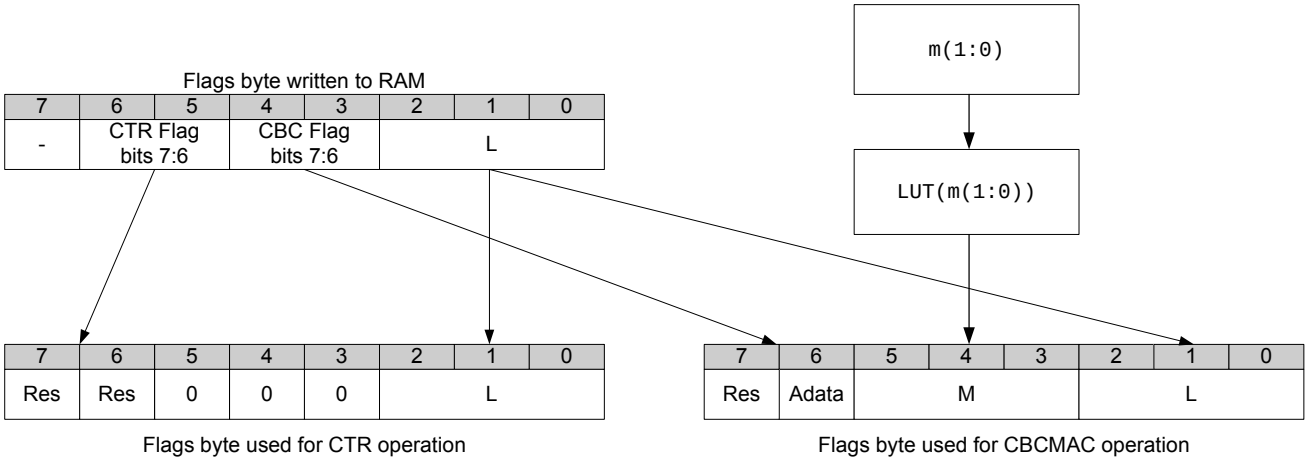

Figure 35: Security flags

Figure 36 shows how the most significant byte of the counter in CC2520 RAM represents both the CTR and CBC-MAC security flags.
For the CBC-MAC flags, a lookup procedure is used to translate the two least significant bits of the m parameter to the CBCMAC instruction in the M value that is used in the flag byte. The same translation is used for the CBC-MAC part of the CCM instruction.

Table 19: Lookup table for M value

m(1:0)	M
00	000
01	001
10	011
11	111

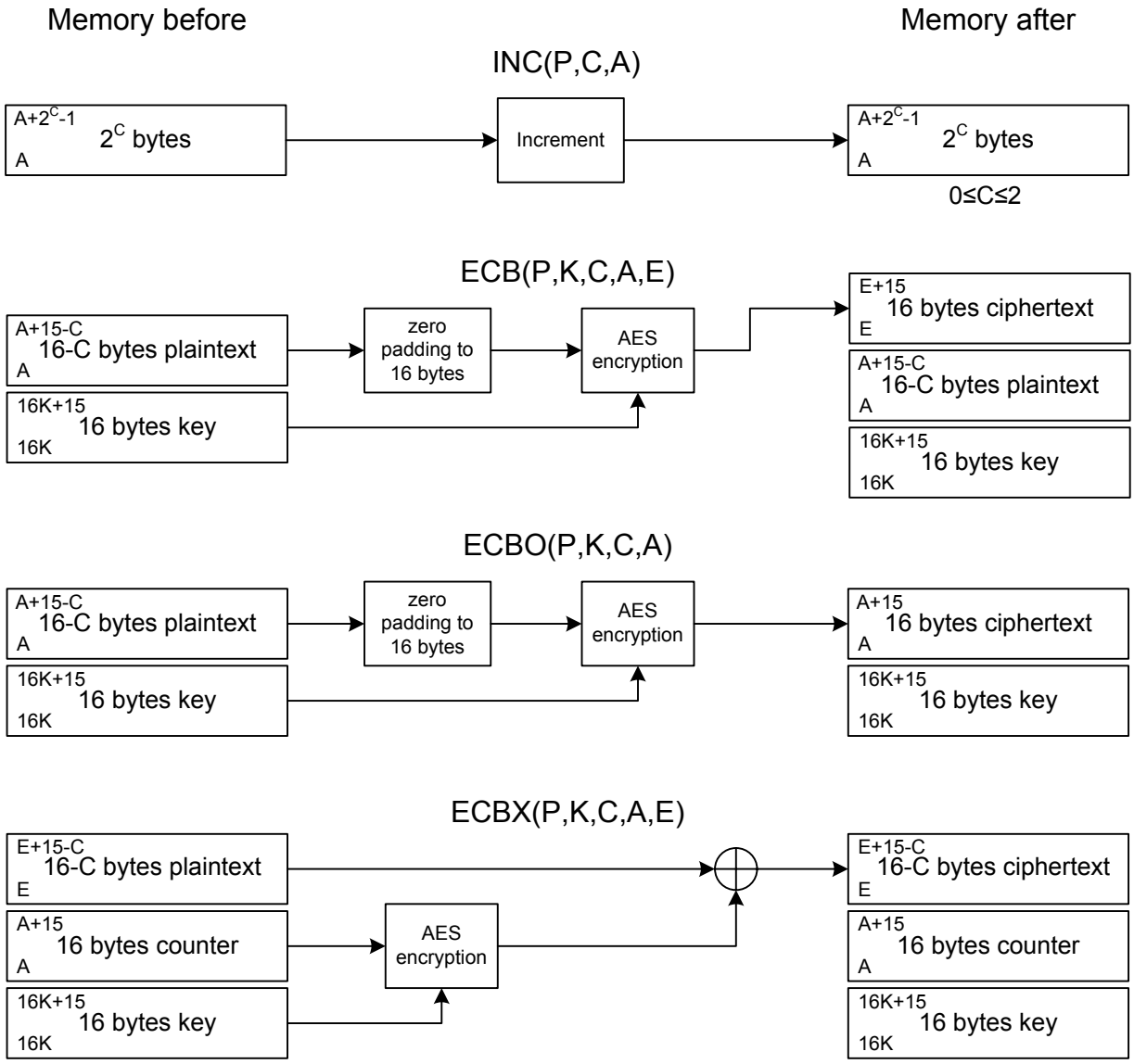

Figure 36: Simple encryption instructions

26.2 INC

The INC instruction increments 1, 2 or 4 bytes, with the LSB at address A. Note that C=3 is an illegal parameter value.

26.3 ECB

The ECB instruction performs basic block encryption. It is mainly intended as a function used by the more complicated instructions such as CBC-MAC and CCM. ECB by itself is not very useful, because there is no decryption instruction. The cipher text output can not be recovered. This should not be considered as a weakness, because ECB block encryption/decryption is not considered to be a secure form of communicating.

The values of the parameters E and C should be selected with care so that the instruction does not overwrite a section of the memory that is already in use. The ECB instruction will work exactly as ECBO if E=A.

26.4 ECBO

The ECBO instruction is identical to ECB, except that it will store its output to the same memory locations as the input was read from. It will always output 16 bytes even though the input was not a full 16 bytes.

26.5 ECBX

The ECBX instruction is identical to ECB, except that it will bitwise XOR the result from the encryption with the memory contents of the output address.

The values of the parameters E and C should be selected with care so that the instruction does not overwrite a section of the memory that is already in use. The ECBX instruction will work exactly as ECBXO if E=A.

Note that the terminology from counter mode encryption is used in Figure 37.

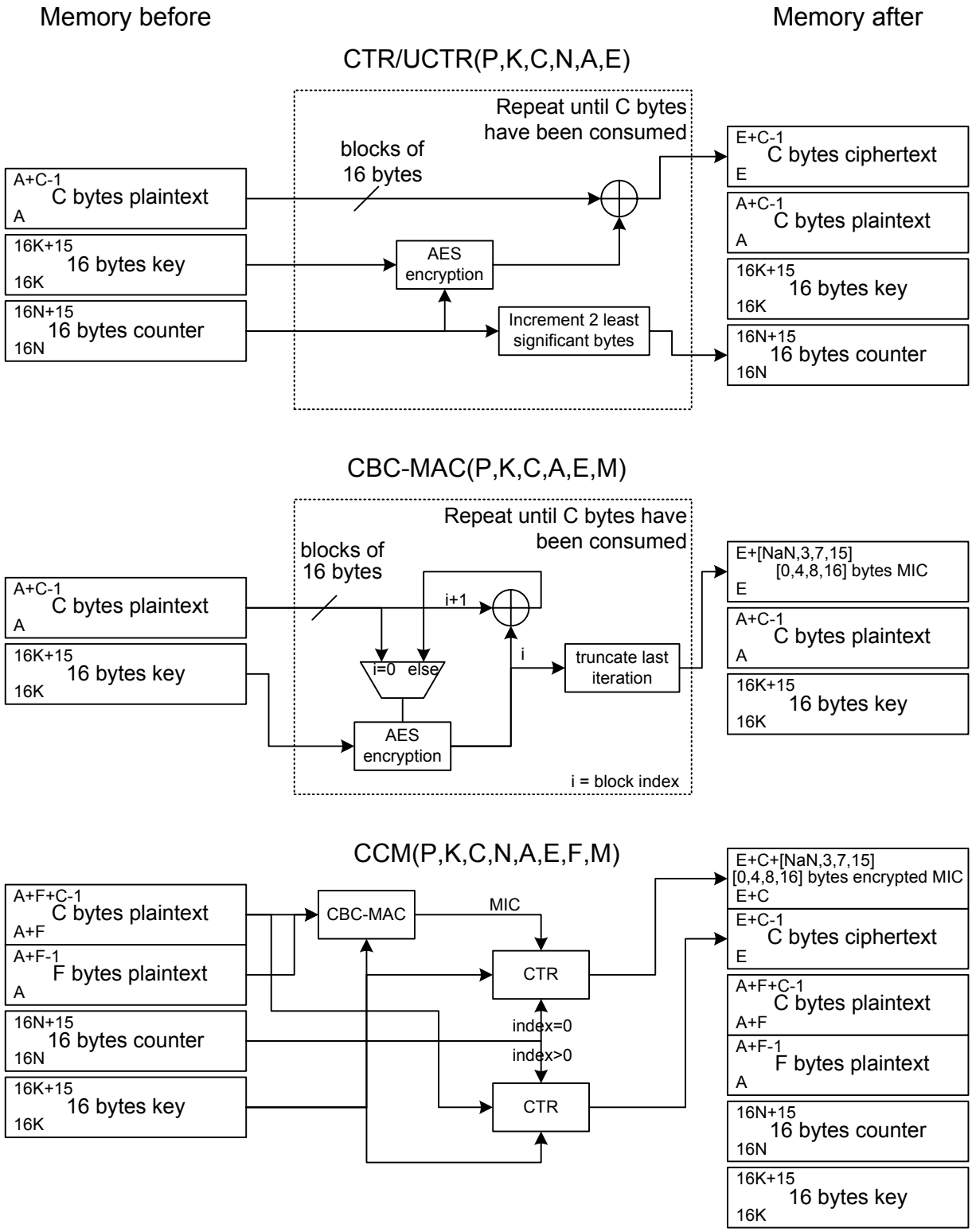

Figure 37: Advanced security instructions

26.6 CTR / UCTR

The CTR instruction will perform counter mode encryption on a configurable number C of plaintext bytes. It outputs C ciphertext bytes. The 2 least significant bytes of the counter are incremented after each 16 byte block of plaintext has been processed.

If the last block of plaintext is not 16 bytes long, only the required number of bits (from the MSB end) from the encryption is used in the XOR operation.

The UCTR instruction performs counter mode decryption and is absolutely identical to the CTR instruction because counter mode encryption and decryption are symmetrical operations.

26.7 CBC-MAC

The CBC-MAC instruction performs authentication.

Note that if M[1:0]=0 no authentication code is output. For other values of M[1:0] the number of authentication bytes that are output is $2^{M[1:0]+1}$. If M[2]=0 the plaintext data is prefixed with the value of C expanded to 8 bits by concatenation of a 0 at the MSB end.

26.8 CCM / UCCM

The CCM instruction uses both CBC-MAC and CTR to perform both authentication and encryption. It supports the CCM* mode of operation as specified in IEEE 802.14.5-2006 [2].

The authentication (CBC-MAC) part calculates a Message Integrity Code (MIC) over the address range A to A+F+C-1. The resulting MIC is encrypted with CTR mode encryption using the counter value with index 0.

The encryption (CTR) part encrypts the address range A+F to A+F+C-1 using CTR mode encryption and counter values with index 1 and up, and thus generates C bytes of ciphertext.

The output which is the concatenation of the ciphertext and the encrypted MIC is written to memory starting at address E.

The UCCM instruction decrypts the ciphertext in the address range A+F to A+F+C-1 using CTR mode decryption. A MIC is then generated in the same way as for the CCM instruction, and compared to the MIC in the input data. The result of the MIC comparison is stored in the DPUSTAT register.

26.8.1 Inputs to the CCM and UCCM Instructions

The input parameters to the CCM and UCCM instructions are described in detail in Figure 38 and Figure 39 with notes on how they related to the terminology used in the IEEE 802.15.4 specifications.

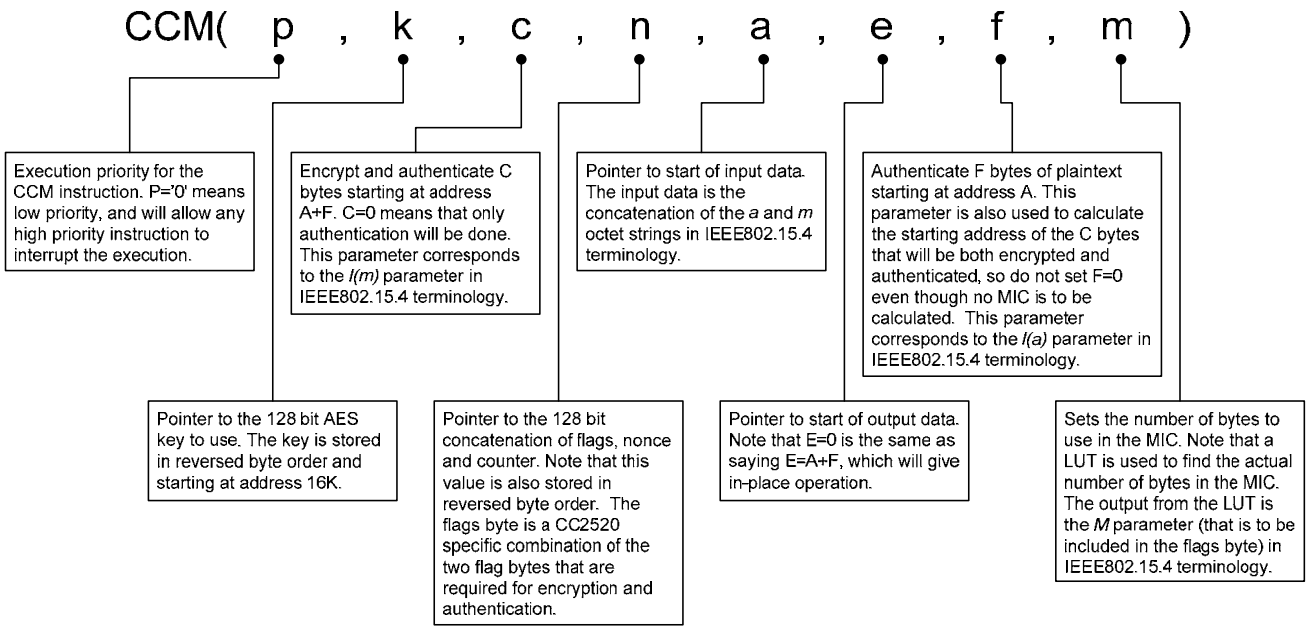

Figure 38: Details of the input parameters to the CCM instruction.

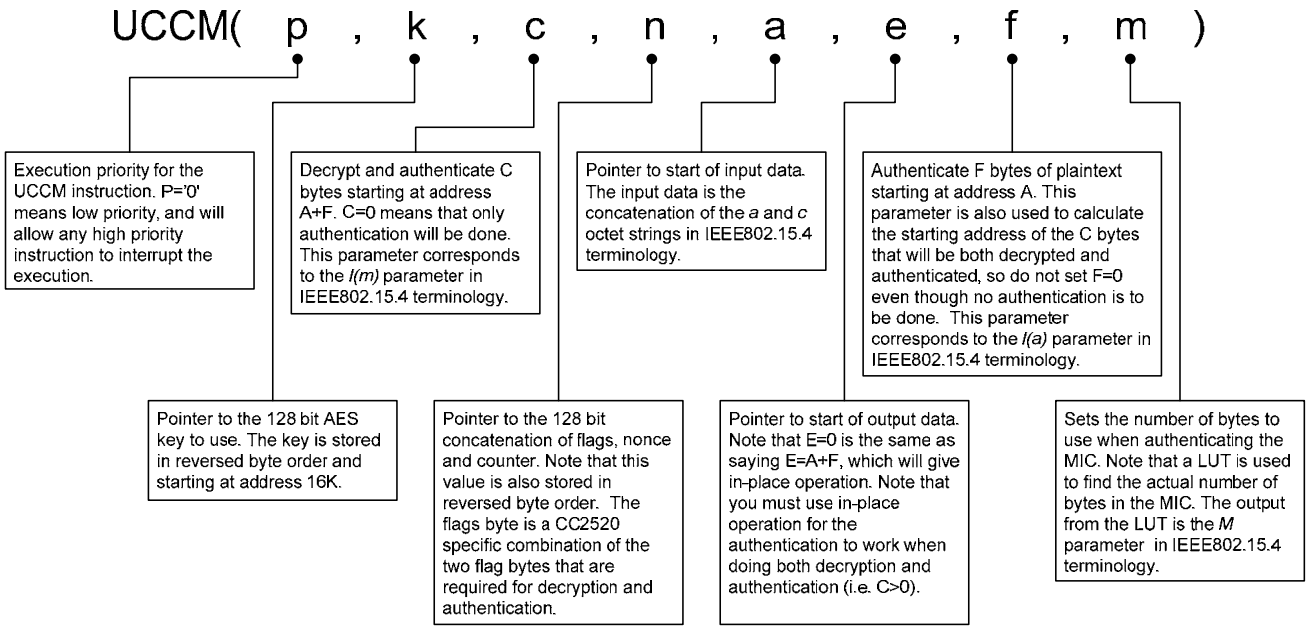

Figure 39: Details of the input parameters to the UCCM instruction.

26.9 Examples from IEEE802.15.4-2006

This section contains a detailed step-by-step guide to reproducing the CCM* examples given in annex C of IEEE802.15.4-2006 [2]. The addresses that are used in these examples are chosen at random. Other addresses can be used as well. Note that all the parameters to the instructions in the examples use hex notation, and that section 13.3 describes the exact bit order that is required for the SPI communication.

26.9.1 Authentication Only Using CCM*

This example uses a MAC beacon frame and demonstrates how to apply authentication using the CCM/UCCM instructions.

```
//Write frame data to RAM
//Start at address 0x200
MEMWR(A={02 00} D={08 d0 84 21 43 01 00 00 00 00 48 de ac 02 05 00 00 00 55 cf 00 00 51 52 53 54})
//Write key to RAM in reverse byte order
//Start at address 0x230
MEMWR(A={02 30} D={cf ce cd cc cb ca c9 c8 c7 c6 c5 c4 c3 c2 c1 c0})
//Write concatenation of flags, nonce and counter to RAM in reversed byte order
//Start at address 0x240
MEMWR(A={02 40} D={00 00 02 05 00 00 00 01 00 00 00 00 48 de ac 09})
//Do CCM operation with high priority
//Append the output to the frame data (by setting the output address E to 0x000)
CCM(P={01} K={23} C={00} N={24} A={200} E={000} F={1a} M={02})
```

The expected output from the CCM instruction is {22 3B C1 EC 84 1A B5 53}.

To verify the authentication code in the receiver, the following steps are required.
It is assumed that frame data is already present in RAM from address 0x200.

```
//Write key to RAM in reverse byte order
//Start at address 0x230
MEMWR(A={02 30} D={cf ce cd cc cb ca c9 c8 c7 c6 c5 c4 c3 c2 c1 c0})
//Write concatenation of flags, nonce and counter to RAM in reversed byte order
//Start at address 0x240
MEMWR(a={02 40} D={00 00 02 05 00 00 00 01 00 00 00 00 48 de ac 09})
//Do UCCM operation with low priority
UCCM(P={00} K={23} C={00} N={24} A={200} E={2c0} F={1a} M={02})
//Read DPUSTAT register at address 0x02C to check whether the authentication passed or not
REGRD(A={2c})
```

26.9.2 Encryption Only Using CCM*

This example uses a MAC data frame and demonstrates how to apply encryption/decryption of the payload using the CCM/UCCM instructions.

```
//Write frame data to RAM
//Start at address 0x200
MEMWR(A={02 00} D={69 dc 84 21 43 02 00 00 00 00 48 de ac 01 00 00 00 00 48 de ac 04 05 00 00 00 61
62 63 64})
//Write key to RAM in reverse byte order
//Start at address 0x230
MEMWR(A={02 30} D={cf ce cd cc cb ca c9 c8 c7 c6 c5 c4 c3 c2 c1 c0})
//Write concatenation of flags, nonce and counter to RAM in reversed byte order
//Starting at address 0x240
MEMWR(A={02 40} D={00 00 04 05 00 00 00 01 00 00 00 00 48 de ac 01})
//Do CCM instruction.
CCM(P={01} K={23} C={04} N={24} A={200} E={2c0} F={1a} M={00})
```

The expected output from the CCM instruction is {D4 3E 02 2B}.

To decrypt the frame in the receiver, the following steps are required. It is assumed that the packed data is already present in RAM from address 0x200.

```
//Write key to RAM in reverse byte order
//Start at address 0x230
MEMWR(A={02 30} D={cf ce cd cc cb ca c9 c8 c7 c6 c5 c4 c3 c2 c1 c0})
//Write concatenation of flags, nonce and counter to RAM in reversed byte order
//Starting at address 0x240
MEMWR(A={02 40} D={00 00 04 05 00 00 00 01 00 00 00 00 48 de ac 01})
//Decrypt the frame data and put the plaintext at address 0x2C0.
UCCM(P={01} K={23} C={04} N={24} A={200} E={2c0} F={1a} M={00})
```

The expected output from the CCM instruction is {61 62 63 64}.

26.9.3 Combination of Encryption and Authentication Using CCM*

This example uses a MAC command frame and demonstrates how to apply both encryption/decryption and authentication using the CCM/UCCM instructions.

```
//Write frame data to RAM
//Start at address 0x200
MEMWR(A={02 00} D={2b dc 84 21 43 02 00 00 00 00 48 de ac ff ff 01 00 00 00 00 48 de ac 06 05 00 00
00 01 CE})
//Write key to RAM in reverse byte order
//Start at address 0x230
MEMWR(A={02 30} D={cf ce cd cc cb ca c9 c8 c7 c6 c5 c4 c3 c2 c1 c0})
//Write concatenation of flags, nonce and counter to RAM in reversed byte order
//Starting at address 0x240
MEMWR(A={02 40} D={00 00 06 05 00 00 00 01 00 00 00 00 48 de ac 09})
//Do CCM instruction.
//Replace the last byte in the plaintext frame with the cipehertext and encrypted MIC by setting
the output address E to 0x000.
CCM(P={01} K={23} C={01} N={24} A={200} E={000} F={1d} M={02})
```

The expected output from the CCM instruction is {D8 4F DE 52 90 61 F9 C6 F1}.

To decrypt the frame in the receiver, the following steps are required. It is assumed that the packed data is already present in RAM from address 0x200.

```
//Write key to RAM in reverse byte order
//Start at address 0x230
MEMWR(A={02 30} D={cf ce cd cc cb ca c9 c8 c7 c6 c5 c4 c3 c2 c1 c0})
//Write concatenation of flags, nonce and counter to RAM in reversed byte order
//Starting at address 0x240
MEMWR(A={02 40} D={00 00 06 05 00 00 00 01 00 00 00 00 48 de ac 09})
//Decrypt the frame data and authenticate the MIC. Note that the output address E is set to 0x000.
UCCM(P={01} K={23} C={01} N={24} A={200} E={000} F={1d} M={02})
//Read DPUSTAT register at address 0x02C to check whether the authentication passed or not
REGRD(A={2c})
```

The expected plaintext output from the UCCM instruction is {CE}.

27 Packet Sniffing

Packet sniffing is a non-intrusive way of observing data that is either being transmitted or received by CC2520. The packet sniffer outputs a clock and a data signal which should be sampled on the rising edges of the clock. The two packet sniffer signals are observable as GPIO outputs. For accurate time stamping, the SFD signal should also be output.

Because CC2520 only supports a data rate of 250kbps, the packet sniffer clock frequency is 250 kHz. The data is output serially with the MSB of each byte first, which is opposite of the actual RF transmission, but more convenient when processing the data. It is possible to use an SPI slave to receive the data stream.

When sniffing frames in TX mode, the data that is read from the TX FIFO by the modulator is the same data that is output by the packet sniffer. However, if automatic CRC generation is enabled, the packet sniffer will NOT output these 2 bytes. Instead, it will replace the CRC bytes with 0x8080. This value can never occur as the last two bytes of a received frame (when automatic CRC checking is enabled), and thus it provides a way for the receiver of the sniffed data to separate frames that were transmitted by the CC2520 and frames that were received by the CC2520.

When sniffing frames in RX mode, the data that is written to the RX FIFO by the demodulator is the same data that is output by the packet sniffer. In other words, the last two bytes are either the received CRC value or the CRC OK/RSSI/correlation/SRCRESINDEX value that may automatically replace the CRC value, depending on configuration settings.

Note that in order to observe the packet sniffing data on GPIO pins, the packet sniffer module must be enabled in the MDMTEST1 register, and the correct GPIO configuration must be written to any of the GPIOn registers.

28 Registers

The table below shows the memory mapping for the configuration registers in CC2520.

The FREG registers are accessible with the REGRD and REGWR instructions. Registers in address space 0x000 to 0x01F (marked with gray) are also accessible with the BSET and BCLR instructions.

The SREG registers are only accessible with the MEMRD and MEMWR instructions.

Please also refer to Figure 11: CC2520 memory map for information on the rest of the address range.

Table 20: Register overview

Address (hex)	+0x000	+0x001	+0x002	+0x003
FREG registers				
0x000	FRMFILT0	FRMFILT1	SRCMATCH	
0x004	SRCSHORTEN0	SRCSHORTEN1	SRCSHORTEN2	
0x008	SRCEXTEN0	SRCEXTEN1	SRCEXTEN2	
0x00C	FRMCTRL0	FRMCTRL1	RXENABLE0	RXENABLE1
0x010	EXCFLAG0	EXCFLAG1	EXCFLAG2	
0x014	EXCMASKA0	EXCMASKA1	EXCMASKA2	
0x018	EXCMASKB0	EXCMASKB1	EXCMASKB2	
0x01C	EXCBINDX0	EXCBINDX1	EXCBINDY0	EXCBINDY1
0x020	GPIOCTRL0	GPIOCTRL1	GPIOCTRL2	GPIOCTRL3
0x024	GPIOCTRL4	GPIOCTRL5	GPIOPOLARITY	
0x028	GPIOCTRL		DPUCON	
0x02C	DPUSTAT		FREQCTRL	FREQTUNE
0x030	TXPOWER	TXCTRL	FSMSTAT0	FSMSTAT1
0x034	FIFOPCTRL	FSMCTRL	CCACTRL0	CCACTRL1
0x038	RSSI	RSSISTAT		
0x03C	RXFIRST		RXFIFOCNT	TXFIFOCNT
SREG registers				
0x040	CHIPID		VERSION	
0x044	EXTCLOCK		MDMCTRL0	MDMCTRL1
0x048	FREQEST		RXCTRL	
0x04C	FSCTRL		FSCAL0	FSCAL1
0x050	FSCAL2	FSCAL3	AGCCTRL0	AGCCTRL1
0x054	AGCCTRL2	AGCCTRL3	ADCTEST0	ADCTEST1
0x058	ADCTEST2		MDMTEST0	MDMTEST1
0x05C	DACTEST0	DACTEST1	ATEST	DACTEST2
0x060	PTEST0	PTEST1	RESERVED	
0x064-0x077				
0x078			DPUBIST	
0x07C	ACTBIST		RAMBIST	

NOTE: When accessing unmapped addresses a MEMADDR_ERROR exception will be generated. This is valid for address space from 0x064 to 0x079 and addresses above 0x07F. Other unmapped addresses like i.e. 0x003 will not generate a MEMADDR_ERROR.

28.1 Register Settings Update

This section contains a summary of the register settings that need to be updated from their default value. Note that these values must be written every time CC2520 has been in LPM2 and is being brought back to active mode.

Table 21: Registers that need update from their default value

Register name	Address (hex)	New value (hex)	Description
TXPOWER	030	32	Set 0 dBm output power. Use only the values listed in Table 17 in this register.
CCACTRL0	036	F8	Raises the CCA threshold from about -108dBm to about -84 dBm input level.
MDMCTRL0	046	85	Makes sync word detection less likely by requiring two zero symbols before the sync word.
MDMCTRL1	047	14	Make it more likely to detect sync by removing the requirement that both symbols in the SFD must have a correlation value above the correlation threshold, and make sync word detection less likely by raising the correlation threshold.
RXCTRL	04A	3F	Adjust currents in RX related analog modules.
FSCTRL	04C	5A	Adjust currents in synthesizer.
FSCAL1	04F	2B	Adjust currents in VCO.
AGCCTRL1	053	11	Adjust target value for AGC control loop.
ADCTEST0	056	10	Tune ADC performance.
ADCTEST1	057	0E	Tune ADC performance.
ADCTEST2	058	03	Tune ADC performance.

28.2 Register Access Modes

The “Mode” columns in the tables below show what kind of accesses that are allowed for each bit. Table 22 shows the meaning of the different alternatives.

Table 22: Register bits access modes

Mode	Description
R	Read
W	Write
R0	Read constant zero
R1	Read constant one
W1	Only possible to write one
W0	Only possible to write zero
R*	The value read is not the actual register value, but rather the value seen by the module. This is typically used where a configuration value may be generated automatically (through calibration, dynamic control etc.) or manually overridden with a register value. An example structure is shown below for the AGCCTRL2 register.

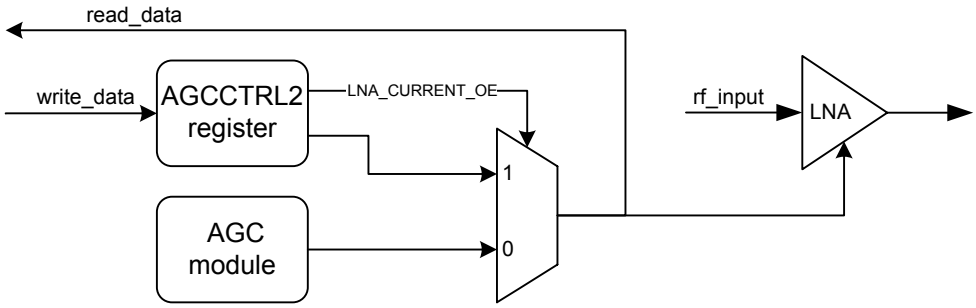

Figure 40: Example hardware structure for the R* register access mode.

28.3 Register Descriptions

The heading for each register is built up according to the following pattern:
<*Register name*>, A <*address*>, R <*reset value*>, <*Short register description*>

FRMFILT0, A 0x000, R 0x0D, Frame filtering

Bit no.	Bit mnemonic	Reset value	Mode	Description
7	RESERVED	0	R/W	Reserved. Always write '0'
6:4	FCF_RESERVED_MASK[2:0]	000	R/W	Used for filtering on the reserved part of the frame control field (FCF). FCF_RESERVED_MASK[2:0] is AND'ed with FCF[9:7]. If the result is non-zero, and frame filtering is enabled, the frame is rejected.
3:2	MAX_FRAME_VERSION[1:0]	11	R/W	Used for filtering on the frame version field of the frame control field (FCF). If FCF[13:12] (the frame version subfield) is higher than MAX_FRAME_VERSION[1:0], and frame filtering is enabled, the frame is rejected.
1	PAN_COORDINATOR	0	R/W	Should be set high when the device is a PAN coordinator, to accept frames with no destination address (as specified in section 7.5.6.2 in 802.15.4(b)) 0 - Device is not PAN coordinator 1 - Device is PAN coordinator
0	FRAME_FILTER_EN	1	R/W	Enables frame filtering. When this bit is set, CC2520 will perform frame filtering as specified in section 7.5.6.2 of 802.15.4(b), third filtering level. FRMFILT0[6:1] and FRMFILT1[7:1] together with the local address information, define the behavior of the filtering algorithm. 0 - Frame filtering off. (FRMFILT0[6:1], FRMFILT1[7:1] and SRCMATCH[2:0] are don't care). 1 - Frame filtering on.

FRMFILT1, A 0x001, R 0x78, Frame filtering

Bit no.	Bit mnemonic	Reset value	Mode	Description
7	ACCEPT_FT_4TO7_RESERVED	0	R/W	Defines whether reserved frames are accepted or not. Reserved frames have frame type = (100, 101, 110, 111). 0 - Reject 1 - Accept
6	ACCEPT_FT_3_MAC_CMD	1	R/W	Defines whether MAC command frames are accepted or not. MAC command frames have frame type = 011. 0 - Reject 1 - Accept
5	ACCEPT_FT_2_ACK	1	R/W	Defines whether acknowledgment frames are accepted or not. Acknowledgement frames have frame type = 010. 0 - Reject 1 - Accept
4	ACCEPT_FT_1_DATA	1	R/W	Defines whether data frames are accepted or not. Data frames have frame type = 001. 0 - Reject 1 - Accept.
3	ACCEPT_FT_0_BEACON	1	R/W	Defines whether beacon frames are accepted or not. Beacon frames have frame type = 000 0 - Reject 1 - Accept
2:1	MODIFY_FT_FILTER[1:0]	00	R/W	These bits are used to modify the frame type field of a received frame before frame type filtering is performed. The modification does not influence the frame that is written to the RX FIFO. 00 : Leave as it is 01 : Invert MSB 10 : Set MSB to ‘0’ 11 : Set MSB to ‘1’
0	RESERVED	0	R/W	Reserved. Always write ‘0’

SRCMATCH, A 0x002, R 0x07, Source address matching and pending bits

Bit no.	Bit mnemonic	Reset value	Mode	Description
7:3	RESERVED[4:0]	0x00	R/W	Reserved. Always write '0'
2	PEND_DATAREQ_ONLY	1	R/W	When this bit is set, the AUTOPEND function also requires that the received frame is a "DATA REQUEST" MAC command frame.
1	AUTOPEND	1	R/W	Automatic acknowledgment pending flag enable. Upon reception of a frame, the pending bit in the (possibly) returned acknowledgment will be set automatically, given that: - FRMFILT0.FRAME_FILTER_EN is set. - SRCMATCH.SRC_MATCH_EN is set. - SRCMATCH.AUTOPEND is set. - The received frame matches the current SRCMATCH.PEND_DATAREQ_ONLY setting. - The received source address matches at least one source match table entry, which is enabled in both SHORT_ADDR_EN and SHORT_PEND_EN or EXT_ADDR_EN and EXT_PEND_EN. Note: Details for SHORT_PEND_EN and EXT_PEND_EN is found in memory map description.
0	SRC_MATCH_EN	1	R/W	Source address matching enable (This bit is "don't care" if FRMFILT0.FRAME_FILTER_EN = 0)

SRCSHORTEN0, A 0x004, R 0x00, Short address matching

Bit no.	Bit mnemonic	Reset value	Mode	Description
7:0	SHORT_ADDR_EN[7:0]	0x00	R/W	The 7:0 part of the 24-bit word SHORT_ADDR_EN that enables / disables source address matching for each of the 24 short address table entries. Optional safety feature: To ensure that an entry in the source matching table is not used while it is being updated, set the corresponding SHORT_ADDR_EN bit to 0 while updating.

SRCSHORTEN1, A 0x005, R 0x00, Short address matching

Bit no.	Bit mnemonic	Reset value	Mode	Description
7:0	SHORT_ADDR_EN[15:8]	0x00	R/W	The 15:8 part of the 24-bit word SHORT_ADDR_EN See description of SRCSHORTEN0.

SRCSHORTEN2, A 0x006, R 0x00, Short address matching

Bit no.	Bit mnemonic	Reset value	Mode	Description
7:0	SHORT_ADDR_EN[23:16]	0x00	R/W	The 23:16 part of the 24-bit word SHORT_ADDR_EN See description of SRCSHORTEN0.

SRCEXTEN0, A 0x008, R 0x00, Extended address matching

Bit no.	Bit mnemonic	Reset value	Mode	Description
7:0	EXT_ADDR_EN[7:0]	0x00	R/W RO	The 7:0 part of the 24-bit word EXT_ADDR_EN that enables / disables source address matching for each of the 12 extended address table entries. Write access: Extended address enable for table entry *n* (0 to 7) is mapped to EXT_ADDR_EN[2n]. All EXT_ADDR_EN[2n + 1] bits are read only and don't care when written to. Read access: Extended address enable for table entry *n* (0 to 7) is mapped to both EXT_ADDR_EN[2n] and EXT_ADDR_EN[2n+1]. Optional safety feature: To ensure that an entry in the source matching table is not used while it is being updated, set the corresponding EXT_ADDR_EN bit to 0 while updating.

SRCEXTEN1, A 0x009, R 0x00, Extended address matching

Bit no.	Bit mnemonic	Reset value	Mode	Description
7:0	EXT_ADDR_EN[15:8]	0x00	R/W	The 15:8 part of the 24-bit word EXT_ADDR_EN See description of SRCEXTEN0.

SRCEXTEN2, A 0x00A, R 0x00, Extended address matching

Bit no.	Bit mnemonic	Reset value	Mode	Description
7:0	EXT_ADDR_EN[23:16]	0x00	R/W	The 23:16 part of the 24-bit word EXT_ADDR_EN See description of SRCEXTEN0.

FRMCTRL0, A 0x00C, R 0x40, Frame handling

Bit no.	Bit mnemonic	Reset value	Mode	Description
7	APPEND_DATA_MODE	0	R/W	When AUTOCRC = 0:Don't care When AUTOCRC = 1: 0: RSSI + The crc_ok bit and the 7 bit correlation value is appended at the end of each received frame 1: RSSI + The crc_ok bit and the 7 bit SRCRESINDEX is appended at the end of each received frame. See Table 15 for details.
6	AUTOCRC	1	R/W	In TX: 1: A CRC-16 (ITU-T) is generated in hardware and appended to the transmitted frame. There is no need to write the two last bytes to TXBUF. 0: No CRC-16 is appended to the frame. The two last bytes of the frame must be generated manually and written to TXBUF (if not, TX_UNDERFLOW will occur). In RX 1: The CRC-16 is checked in hardware, and replaced in the RX FIFO by a 16-bit status word which contains a CRC OK bit. The status word is controllable through APPEND_DATA_MODE 0: The last two bytes of the frame (crc-16 field) are stored in the RXFIFO. The CRC check (if any) must be done manually. Note that this setting does not influence acknowledgment transmission (including AUTOACK)
5	AUTOACK	0	R/W	Defines whether CC2520 automatically transmits acknowledge frames or not. When autoack is enabled, all frames that are accepted by address filtering, have the acknowledge request flag set and have a valid CRC, are automatically acknowledged 12 symbol periods after being received. 0 - Autoack disabled 1 - Autoack enabled
4	ENERGY_SCAN	0	R/W	Defines whether the RSSI register contains the most recent signal strength or the peak signal strength since the energy scan was enabled. 0 - Most recent signal strength 1 - Peak signal strength
3:2	RX_MODE[1:0]	00	R/W	Set RX modes 00: Normal operation, use RXFIFO. 01: Reserved 10: RXFIFO looping ignore overflow in RXFIFO, infinite reception. 11: Same as normal operation except that symbol search is disabled. Can be used for RSSI or CCA measurements when it is undesired to find symbol.
1:0	TX_MODE[1:0]	00	R/W	Set test modes for TX 00: Normal operation, transmit TXFIFO 01: Reserved. Should not be used. 10: TXFIFO looping ignore underflow in TXFIFO and read cyclic, infinite transmission. 11: Send pseudo random data from CRC, infinite transmission.

FRMCTRL1, A 0x00D, R 0x01, Frame handling

Bit no.	Bit mnemonic	Reset value	Mode	Description
7:3	RESERVED	0x00	R0	Read as zero
2	PENDING_OR	0	R/W	Defines whether the pending data bit in outgoing acknowledgment frames are always set to '1' or controlled by the main FSM and the address filtering. 0 - Pending data bit is controlled by main FSM and address filtering 1 - Pending data bit is always '1'.
1	IGNORE_TX_UNDERF	0	R/W	Defines whether TX underflow should be ignored or not. 0 - Normal TX operation. TX underflow is detected and TX is aborted if underflow occurs 1 - Ignore TX underflow. Transmit the number of bytes given by the length field.
0	SET_RXENMASK_ON_TX	1	R/W	Defines whether STXON will set bit 14 in the RXENABLE register or leave it unchanged. 0: Do *not* affect RXENABLE. 1: Set bit 14 in RXENABLE. Used for backwards compatibility with CC2420.

RXENABLE0, A 0x00E, R 0x00, RX enabling

Bit no.	Bit mnemonic	Reset value	Mode	Description
7:0	RXENMASK[7:0]	0x00	R/W	LSB part of the 16 bit word RXENMASK RXENABLE enables the receiver. A non-zero value in this register will cause the main FSM to enable the receiver when in idle, after transmission and after acknowledgement transmission. The following strobes can modify RXENMASK: SRXON: Set bit 15 in RXENMASK STXON: Set bit 14 in RXENMASK if SET_RXENMASK_ON_TX = '1' SRFOFF: Clears all bits in RXENMASK The following instructions modifies RXENMASK: RXMASKAND : Performs a bitwise AND between RXENMASK and the 16 bit parameter given with the instruction RXMASKOR : Performs a bitwise OR between RXENMASK and the 16 bit parameter given with the instruction RXENABLE can also be written and is bit accessible. BSET and BCLR set and clear any of the 16 bits in RXENMASK. SRXMASKBITSET and SRXMASKBITCLR will set and clear bit 13 in RXENMASK. There are several sources which might try to modify RXENMASK simultaneously. To handle the case of simultaneous access to RXENMASK from different sources the following rules apply: - If two sources are not in conflict (they modify different parts of the register) both their requests to modify RXENMASK will be processed. -Data bus has priority over all sources (BSET, BCLR, REGWR, MEMWR) Strobes which modify RXENMASK are prioritized as following: 1 SRFOFF 2 SXTON 3 SRXON 4 RXMASKOR 5 RXMASKAND 6 SRXMASKBITSET 7 SRXMASKBITCLR

RXENABLE1, A 0x00F, R 0x00, RX enabling

Bit no.	Bit mnemonic	Reset value	Mode	Description
7:0	RXENMASK[15:8]	0x00	R/W	MSB part of the 16 bit word RXENMASK Se description of RXENABLE0.

EXCFLAG0, A 0x010, R 0x00, Exception flags

Bit no.	Bit mnemonic	Reset value	Mode	Description
7:0	EXCFLAG[7:0]	0x00	R/W0	Exception pending bits for exceptions 7 to 0. Whenever an exception occurs this bit will be set by hardware. Only software can clear this bit. EXCFKLAG is write zero only and attempts to write '1' to any bits in EXFLAG will not result in a register change. 1: This exception has occurred and not yet cleared. 0: This exception has not yet occurred or has been cleared by software. Bit no — Exception 0 — RF_IDLE 1 — TX_FRM_DONE 2 — TX_ACK_DONE 3 — TX_UNDERFLOW 4 — TX_OVERFLOW 5 — RX_UNDERFLOW 6 — RX_OVERFLOW 7 — RXENABLE_ZERO

EXCFLAG1, A 0x011, R 0x00, Exception flags

Bit no.	Bit mnemonic	Reset value	Mode	Description
7:0	EXCFLAG[15:8]	0x00	R/W0	Exception pending bits for exceptions 15 to 8. See description above. Bit no — Exception 8 — RX_FRM_DONE 9 — RX_FRM_ACCEPTED 10 — SRC_MATCH_DONE 11 — SRC_MATCH_FOUND 12 — FIFOP 13 — SFD 14 — DPU_DONE_L 15 — DPU_DONE_H

EXCFLAG2, A 0x012, R 0x00, Exception flags

Bit no.	Bit mnemonic	Reset value	Mode	Description
7:0	EXCFLAG[23:16]	0x00	R/W0	Exception pending bits for exceptions 23 to 16. See description above. Bit no — Exception 16 — MEMADDR_ERROR 17 — USAGE_ERROR 18 — OPERAND_ERROR 19 — SPI_ERROR 20 — RF_NO_LOCK 21 — RX_FRM_ABORTED 22 — RXBUFMOV_TIMEOUT 23 — UNUSED

EXCMASKA0, A 0x014, R 0x00, Exception masking channel A

Bit no.	Bit mnemonic	Reset value	Mode	Description
7:0	EXCMASKA[7:0]	0x00	R/W	The 7:0 part of 24 bit word EXCMASKA Mask exceptions for channel A. If channel A is selected as output configuration for a pin, an exception indication will be generated on that pin when a selected exception occurs. If the complementary channel is selected, then an exception will be indicated when a masked exception occurs. For each bit: 1: Selected 0: Masked

EXCMASKA1, A 0x015, R 0x00, Exception masking channel A

Bit no.	Bit mnemonic	Reset value	Mode	Description
7:0	EXCMASKA[15:8]	0x00	R/W	The 15:8 part of 24 bit word EXCMASKA See description of EXCMASKA0.

EXCMASKA2, A 0x016, R 0x00, Exception masking channel A

Bit no.	Bit mnemonic	Reset value	Mode	Description
7:0	EXCMASKA[23:16]	0x00	R/W	The 23:16 part of 24 bit word EXCMASKA See description of EXCMASKA0.

EXCMASKB0, A 0x018, R 0x00, Exception masking channel B

Bit no.	Bit mnemonic	Reset value	Mode	Description
7:0	EXCMASKB[7:0]	0x00	R/W	The 7:0 part of 24 bit word EXCMASKB Mask exceptions for channel B. If channel B is selected as output configuration for a pin, an exception indication will be generated on that pin when a selected exception occurs. If the complementary channel is selected, then an exception will be indicated when a masked exception occurs. For each bit: 1: Selected 0: Masked

EXCMASKB1, A 0x019, R 0x00, Exception masking channel B

Bit no.	Bit mnemonic	Reset value	Mode	Description
7:0	EXCMASKB[15:8]	0x00	R/W	The 15:8 part of 24 bit word EXCMASKB See description of EXCMASKB0.

EXCMASKB2, A 0x01A, R 0x00, Exception masking channel B

Bit no.	Bit mnemonic	Reset value	Mode	Description
7:0	EXCMASKB[23:16]	0x00	R/W	The 23:16 part of 24 bit word EXCMASKB See description of EXCMASKB0.

EXCBINDX0, A 0x01C, R 0x00, Exception binding channel X

Bit no.	Bit mnemonic	Reset value	Mode	Description
7:4	RESERVED	0x0	R0	Read as zero
3:0	INSTRUCTIONX	0x0	R/W	Instruction for channel X Instruction number to bind to exception. See documentation for GPIO configuration for list over possible instructions that can be bound.

EXCBINDX1, A 0x01D, R 0x12, Exception binding channel X

Bit no.	Bit mnemonic	Reset value	Mode	Description
7	BINDX_EN	0	R/W	Defines whether exception binding for channel X is enabled or not. 0 - Binding disabled. 1 -: Binding enabled. Whenever the exception given by EXCEPTIONX occurs the instruction given by INSTRUCTIONX is executed.
6:5	RESERVED	00	R0	Read as zero
4:0	EXCEPTIONX	0x12	R/W	Exception for channel X Exception number to bind to an instruction. Se table in Exception overview for valid configurations

EXCBINDY0, A 0x01E, R 0x00, Exception binding channel Y

Bit no.	Bit mnemonic	Reset value	Mode	Description
7:4	RESERVED	0x0	R0	Read as zero
3:0	INSTRUCTIONY	0x0	R/W	Instruction for channel Y Instruction number to bind to exception. See documentation for GPIO configuration for list over possible instructions that can be bound.

EXCBINDY1, A 0x01F, R 0x12, Exception binding channel Y

Bit no.	Bit mnemonic	Reset value	Mode	Description
7	BINDY_EN	0	R/W	Defines whether exception binding for channel Y is enabled or not. 0: Binding disabled. 1: Binding enabled. Whenever the exception given by EXCEPTIONY occurs the instruction given by INSTRUCTIONY is executed.
6:5	RESERVED	0	R0	Read as zero
4:0	EXCEPTIONY	0x12	R/W	Exception for channel Y Exception number to bind to an instruction. Se table in Exception overview for valid configurations

GPIOCTRL0, A 0x020, R 0x00, Control GPIO0

Bit no.	Bit mnemonic	Reset value	Mode	Description
7	IN0	0	R/W	Defines whether GPIO0 is an input or output. Must be set as input when using analog test functionality. 0 - GPIO0 is output 1 - GPIO0 is input
6:0	CTRL0	0x00	R/W	GPIO0 Configuration When output: mux selector. See GPIO description for table over all possible signals that can be set as output to the pin. When input: 4 LSBs chose one of 16 instructions to be triggered on the active edge of this GPIO input line. Values above 0x0F have no effect.

GPIOCTRL1, A 0x021, R 0x27, Control GPIO1

Bit no.	Bit mnemonic	Reset value	Mode	Description
7	IN1	0	R/W	Defines whether GPIO1 is an input or output. Must be set as input when using analog test functionality. 0 - GPIO1 is output 1 - GPIO1 is input
6:0	CTRL1	0x27	R/W	GPIO1 configuration. For details, see GPIOCTRL0 register

GPIOCTRL2, A 0x022, R 0x28, Control GPIO2

Bit no.	Bit mnemonic	Reset value	Mode	Description
7	IN2	0	R/W	Defines whether GPIO2 is an input or output. 0 - GPIO2 is output 1 - GPIO2 is input
6:0	CTRL2	0x28	R/W	GPIO2 configuration For details, see GPIOCTRL0 register

GPIOCTRL3, A 0x023, R 0x29, Control GPIO3

Bit no.	Bit mnemonic	Reset value	Mode	Description
7	IN3	0	R/W	Defines whether GPIO3 is an input or output. 0 - GPIO3 is output 1 - GPIO3 is input
6:0	CTRL3	0x29	R/W	GPIO3 configuration. For details, see GPIOCTRL0 register

GPIOCTRL4, A 0x024, R 0x2A, Control GPIO4

Bit no.	Bit mnemonic	Reset value	Mode	Description
7	IN4	0	R/W	Defines whether GPIO4 is an input or output. 0 - GPIO4 is output 1 - GPIO4 is input
6:0	CTRL4	0x2A	R/W	GPIO4 configuration. For details, see GPIOCTRL0 register

GPIOCTRL5, A 0x025, R 0x90, Control GPIO5

Bit no.	Bit mnemonic	Reset value	Mode	Description
7	IN5	1	R/W	Defines whether GPIO5 is an input or output. 0 - GPIO5 is output 1 - GPIO5 is input
6:0	CTRL5	0x10	R/W	GPIO5 configuration For details, see GPIOCTRL0 register

GPIOPOLARITY, A 0x026, R 0x3F, Polarity control for GPIO pins

Bit no.	Bit mnemonic	Reset value	Mode	Description
7:6	RESERVED	00	R0	Read as zero
5:0	POLARITY	0x3F	R/W	Selects output polarity or input edge of GPIO pins. 0 - Negative polarity. Level indication is active low. When input, falling edge is active. 1 - Positive polarity. Level indication is active high. When input, rising edge is active.

GPIOCTRL, A 0x028, R 0x00, Other GPIO options

Bit no.	Bit mnemonic	Reset value	Mode	Description
7	SC	0	R/W	Select extra drive strength for pads. 0 - No extra drive 1 - Extra drive
6	GPIO_ACTRL	0	R/W	Controls analog functionality for GPIO[1:0]. When set both GPIO pin 0 and 1 will be set to analog pads. 0 - Disable analog pads 1 - Enable analog pads
5:0	GPIO_PUE	0x00	R/W	Set pull up enable individually on GPIO pads 0 through 5 Pull up is 20 kohm +/- 15% 0 - Pull up disabled 1 - Pull up enabled

DPUCON, A 0x02A, R 0x01, Timeout control for DPU

Bit no.	Bit mnemonic	Reset value	Mode	Description
7:1	RESERVED	0x00	R0	Read as zero
0	RXTIMEOUT	1	R/W	Defines whether the RXBUFMOV instruction will time out after 32 us or immediately when the RXFIFO is empty. When the 32 us timeout is enabled, the RXBUFMOV instruction can be run with a higher number of bytes than the number of bytes currently stored in RXFIFO since one byte is received every 32us. 0 - Immediate time out 1 - 32us time out

DPUSTAT, A 0x02C, R 0x00, DPU status register

Bit no.	Bit mnemonic	Reset value	Mode	Description
7:4	RESERVED	0000	R0	Read as 0
3	AUTHSTAT_H	0	R	Authentication status, high priority Updated when a high priority UCBCMAC or UCCM instruction completes and keep result until a new instruction completes. Reports the result of the last run authentication operation. 0: Authentication check failed. 1: Authentication check passed or no authentication check was performed.
2	AUTHSTAT_L	0	R	Authentication status, low priority Updated when a low priority UCBCMAC or UCCM instruction completes and keep result until a new instruction completes. Reports the result of the last run authentication operation. 0: Authentication check failed. 1: Authentication check passed or no authentication check was performed.
1	DPUH_ACTIVE	0	R	High Priority Active 0: No high priority DPU instruction is currently active. 1: A high priority DPU instruction is currently active.
0	DPUL_ACTIVE	0	R	Low Priority Active 0: No low priority DPU instruction is currently active. 1: A low priority DPU instruction is currently active.

FREQCTRL, A 0x02E, R 0x0B, Controls the RF frequency

Bit no.	Bit mnemonic	Reset value	Mode	Description
7	RESERVED	0	R0	Read as zero
6:0	FREQ[6:0]	0x0B (2405 MHz)	R/W	Frequency control word. $f_{RF} = f_{LO} = (2394 + FREQ[6:0])$ MHz The frequency word in freq[6:0] is an offset value from 2394. The device supports the frequency range from 2394MHz to 2507MHz. The usable settings for freq[6:0] is consequently 0 to 113. Settings outside this (114-127) will give a frequency of 2507MHz. IEEE802.15.4-2006 specifies a frequency range from 2405MHz to 2480MHz with 16 channels 5 MHz apart. The channels are numbered 11 through 26. For an IEEE802.15.4-2006 compliant system, the only valid settings are thus freq[6:0] = 11 + 5(channel number - 11)

FREQTUNE, A 0x02F, R 0x0F, Crystal oscillator frequency tuning

Bit no.	Bit mnemonic	Reset value	Mode	Description
7:4	RESERVED	0x0	R0	Read as zero
3:0	XOSC32M_TUNE[3:0]	0xF	R/W	Tune crystal oscillator The default setting “1111” will leave the XOSC not tuned. Changing setting from default will switch in extra capacitance to the oscillator, effectively lowering the XOSC frequency. Hence higher setting gives higher frequency.

TXPOWER, A 0x030, R 0x06, Controls the output power

Bit no.	Bit mnemonic	Reset value	Mode	Description
7:0	PA_POWER [7:0]	0x06	R/W	PA power control. Use only the values listed in in this register. NOTE This value should be updated to one of the values listed in Table 17 before going to TX.

FSMSTAT0, A 0x032, R 0x00, Radio status register

Bit no.	Bit mnemonic	Reset value	Mode	Description
7	CAL_DONE	0	R	Note that this signal can not be used as a “calibration completed” signal. It will only be high for a very brief period of time (one 32 MHz clock cycle) when the calibration module is ready to be turned off (which does not necessarily mean that the calibration has completed) and is thus difficult to capture with a register read over the SPI. This signal should not be documented in the datasheet. Falling edges on CAL_RUNNING should be used in stead.
6	CAL_RUNNING	0	R	Frequency synth calibration status. 0 - Calibration done or not started 1 - Calibration in progress.
5:0	FSM_FFCTRL_STATE[5:0]	-	R	Gives the current state of the FIFO and Frame Control (FFCTRL) finite state machine.

FSMSTAT1, A 0x033, R 0x00, Radio status register

Bit no.	Bit mnemonic	Reset value	Mode	Description
7	FIFO	0	R	FIFO is high whenever there is data in the RXFIFO. Low during RXFIFO overflow
6	FIFOP	0	R	FIFOP is set high when there are more than FIFOP_THR bytes of data in the RXFIFO that has passed frame filtering. FIFOP is set high when there is at least one complete frame in the RXFIFO. FIFOP is set low again when a byte is read from the RXFIFO and this leaves less than FIFOP_THR bytes in the FIFO. FIFOP is high during RXFIFO overflow
5	SFD	0	R	In TX: 0: When a complete frame with SFD has been sent or no SFD has been sent 1: SFD has been sent In RX: 0: When a complete frame has been received or no SFD has been received 1: SFD has been received
4	CCA	0	R	Clear channel assessment. Dependent on CCA_MODE settings. See CCACTRL1 for details.
3	SAMPLED_CCA	0	R	Contains a sampled value of the CCA. The value is updated whenever a SSAMPLECCA or STXONCCA strobe is issued
2	LOCK_STATUS	0	R	'1' when PLL is in lock, otherwise '0'.
1	TX_ACTIVE	0	R	Status signal, active when FFCTRL is in one of the transmit states
0	RX_ACTIVE	0	R	Status signal, active when FFCTRL is in one of the receive states

FIFOPCTRL, A 0x034, R 0x40, FIFOP threshold

Bit no.	Bit mnemonic	Reset value	Mode	Description
7	RESERVED	0	R0	Read as zero
6:0	FIFOP_THR[6:0]	0x40	R/W	Threshold used when generating FIFOP signal

FSMCTRL, A 0x035, R 0x01, FSM options

Bit no.	Bit mnemonic	Reset value	Mode	Description
7:2	RESERVED	0x00	R0	Read as zero
1	SLOTTED_ACK	0	R/W	Controls timing of transmission of acknowledge frames 0: The acknowledge frame will be sent 12 symbol periods after the end of the received frame which requests the aknowledge. 1: The acknowledge frame will be sent at the first backoff slot boundary more than 12 symbol periods after the end of the received frame which requests the aknowledge
0	RX2RX_TIME_OFF	1	R/W	Defines whether or not a 12 symbol time out should be used after frame reception has ended. 0 - No time out. 1 - 12 symbol period time out.

CCACTRL0, A 0x036, R 0xE0, CCA threshold

Bit no.	Bit mnemonic	Reset value	Mode	Description
7:0	CCA_THR[7:0]	0xE0	R/W	Clear Channel Assessment threshold value, signed 2's complement number for comparison with the RSSI. The unit is 1 dB, offset is about 76dBm. The CCA signal goes high when the received signal is below this value. The CCA signal is available on the CCA pin and in FSMSTAT1 register. Note that the value should never be set lower than CCA_HYST-128 in order to avoid erroneous behavior of the CCA signal. **NOTE** The reset value translates to an input level of approximately -32 – 76 = -108 dBm, which is well below the sensitivity limit. That means the CCA signal will never indicate a clear channel. This register should be updated to 0xF8, which translates to an input level of about -8 - 76 = -84dBm.

CCACTRL1, A 0x037, R 0x1A, Other CCA options

Bit no.	Bit mnemonic	Reset value	Mode	Description
7:5	RESERVED	000	R0	Read as zero
4:3	CCA_MODE[1:0]	11	R/W	00 : CCA always set to '1' 01 : CCA = '1' when RSSI < CCA_THR-CCA_HYST, CCA = '0' when RSSI >= CCA_THR 10 : CCA = '1' when not receiving a frame, else CCA = '0' 11 : CCA = '1' when RSSI < CCA_THR-CCA_HYST and not receiving a frame, CCA=0 when RSSI >= CCA_THR or receiving a frame
2:0	CCA_HYST[2:0]	010	R/W	Sets the level of CCA hysteresis. Unsigned values given in dB.

RSSI, A 0x038, R 0x80, RSSI status register

Bit no.	Bit mnemonic	Reset value	Mode	Description
7:0	RSSI_VAL[7:0]	0x80	R	RSSI estimate on a logarithmic scale, signed number on 2's complement. Unit is 1 dB, offset is TBD [depends on the absolute gain of the RX chain, including external components, and should be measured]. The RSSI value is averaged over 8 symbol periods. The RSSI_VALID status bit should be checked before reading RSSI_VAL the first time. The reset value of –128 also indicates that the RSSI value is invalid.

RSSISTAT, A 0x039, R 0x00, RSSI valid status register

Bit no.	Bit mnemonic	Reset value	Mode	Description
7:1	RESERVED	0000 000	R0	Read as zero
0	RSSI_VALID	0	R	RSSI value is valid. Occurs eight symbol periods after entering RX

RXFIRST, A 0x03C, R 0x00, First byte in RXFIFO

Bit no.	Bit mnemonic	Reset value	Mode	Description
7:0	DATA[7:0]	0x00	R	First byte of the RXFIFO. Note: Reading this register will not modify the contents of the FIFO.

RXFIFOCNT, A 0x03E, R 0x00, Number of bytes in RXFIFO

Bit no.	Bit mnemonic	Reset value	Mode	Description
7:0	RXFIFOCNT[7:0]	0x00	R	Number of bytes in the RXFIFO. Unsigned integer.

TXFIFOCNT, A 0x03F, R 0x00, Number of bytes in TXFIFO

Bit no.	Bit mnemonic	Reset value	Mode	Description
7:0	TXFIFOCNT[7:0]	0x00	R	Number of bytes in the TXFIFO. Unsigned integer.

CHIPID, A 0x040, R 0x84, Chip ID

Bit no.	Bit mnemonic	Reset value	Mode	Description
7:0	CHIPID[7:0]	0x84	R	Chip ID number. 0x84 = CC2520

VERSION, A 0x042, R 0x00, Chip version number

Bit no.	Bit mnemonic	Reset value	Mode	Description
7:0	VERSION[7:0]	0x00	R	Chip version. Unsigned integer.

EXTCLOCK, A 0x044, R 0x20, Controls clock output

Bit no.	Bit mnemonic	Reset value	Mode	Description
7:6	RESERVED	00	R0	Read as zero
5	EXTCLOCK_EN	1	RW	Defines whether the clock generator module for the external clock is enabled or not. Note that a GPIO pin must be configured as output and Clock must be selected in one of the GPIOCTRLn registers to get the clock at the selected pin. 1 - Clock running 0 - Clock off
4:0	EXT_FREQ	0x00	RW	Frequency setting of external clock. Changes of frequencies are glitch free and have 50/50 duty cycle. I.e. a change of frequency will not have effect before a complete period of the current clock setting is finished. Setting / Div. factor / Frequency [MHz] 00000 / 32 / 1,00 00001 / 31 / 1,03 00010 / 30 / 1,07 00011 / 29 / 1,10 00100 / 28 / 1,14 00101 / 27 / 1,19 00110 / 26 / 1,23 00111 / 25 / 1,28 01000 / 24 / 1,33 01001 / 23 / 1,39 01010 / 22 / 1,45 01011 / 21 / 1,52 01100 / 20 / 1,60 01101 / 19 / 1,68 01110 / 18 / 1,78 01111 / 17 / 1,88 10000 / 16 / 2,00 10001 / 15 / 2,13 10010 / 14 / 2,29 10011 / 13 / 2,46 10100 / 12 / 2,67 10101 / 11 / 2,91 10110 / 10 / 3,20 10111 / 9 / 3,56 11000 / 8 / 4,00 11001 / 7 / 4,57 11010 / 6 / 5,33 11011 / 5 / 6,40 11100 / 4 / 8,00 11101 / 3 / 10,67 11110 / 2 / 16,00 11111 / 2 / 16,00

MDMCTRL0, A 0x046, R 0x45, Controls modem

Bit no.	Bit mnemonic	Reset value	Mode	Description
7:6	DEM_NUM_ZEROS[1:0]	01	R/W	Sets how many zero symbols have to be detected before the sync word when searching for sync. Note that only one is required to have a correlation value above the correlation threshold set in MDMCTRL1 register. 00 : reserved 01 : 1 zero symbols 10 : 2 zero symbols 11 : 3 zero symbols **NOTE** This value should be updated to “10” before attempting RX. Testing has shown that the reset value causes too many false frames to be received.
5	DEMOD_AVG_MODE	0	R/W	Defines the behavior or the frequency offset averaging filter. 0 - Lock average level after preamble match. Restart frequency offset calibration when searching for the next frame. 1 - Continuously update average level.
4:1	PREAMBLE_LENGTH [3:0]	0010	R/W	The number of preamble bytes (2 zero-symbols) to be sent in TX mode prior to the SFD, encoded in steps of 2. The reset value of 2 is compliant with IEEE 802.15.4 0000 - 2 leading zero bytes 0001 - 3 leading zero bytes 0010 - 4 leading zero bytes … 1111 - 17 leading zero bytes
0	TX_FILTER	1	R/W	Defines what kind of TX filter that is used. The normal TX filter is as defined by the IEEE802.15.4 standard. Extra filtering may be applied in order to lower the out of band emissions. 0 - Normal TX filtering 1 - Enable extra filtering

MDMCTRL1, A 0x047, R 0x2E, Controls modem

Bit no.	Bit mnemonic	Reset value	Mode	Description
7:6	RESERVED	00	R0	Read as zero
5	CORR_THR_SFD	1	R/W	Defines requirements for SFD detection: 0 - The correlation value of one of the zero symbols of the preamble must be above the correlation threshold. 1 - The correlation value of one zero symbol of the preamble and both symbols in the SFD must be above the correlation threshold. **NOTE** This value should be changed to ‘0’ before attempting RX. This will give the best trade off between good sensitivity and few false SFD detections.
4:0	CORR_THR[4:0]	0x0E	R/W	Demodulator correlator threshold value, required before SFD search. Threshold value adjusts how the receiver synchronizes to data from the radio. If threshold is set too low sync can more easily be found on noise. If set too high the sensitivity will be reduced but sync will not likely be found on noise. I combination with DEM_NUM_ZEROS the system can be tuned so sensitivity is high with less synch found on noise. **NOTE** This value should be changed to 0x14 before attempting RX. Testing has shown that too many false frames are received if the reset value is used.

FREQEST, A 0x048, R 0x00, Estimated RF frequency offset.

Bit no.	Bit mnemonic	Reset value	Mode	Description
7:0	FREQEST[7:0]	0x00	R	Signed 2's complement value. Contains an estimate of the frequency offset between carrier and the receiver LO. The offset frequency is FREQESTx7800 Hz. DEM_AVG_MODE controls when this estimate is updated. If DEM_AVG_MODE = 0 it is updated until sync is found. Then the frequency offset estimate is frozen until the end of the received frame. If DEM_AVG_MODE = 1 it is updated as long as the demodulator is enabled.

MDMTEST1, A 0x05B, R 0x08, Test register for modem

Bit no.	Bit mnemonic	Reset value	Mode	Description
7:4	RESERVED	0000	R0	Read as zero
3	RESERVED	1	R/W	Do not write.
2	RFC_SNIFF_EN	0	R/W	0 - Packet sniffer module disabled 1 - Packet sniffer module enabled. The received and transmitted data can be observed on GPIO pins.
1	MODULATION_MODE	0	R/W	Set one of two RF modulation modes for RX / TX 0 - IEEE 802.15.4 compliant mode 1 - Reversed phase, non-IEEE compliant
0	RESERVED	0	R/W	Do not write.

The following registers in the address range 0x04A to 0x07F are for performance tuning and test purposes and should generally not be written. The registers that require updates to give the performance described in this datasheet are listed in Table 21: Registers that need update from their default value.

RXCTRL, A 0x04A, R 0x29, Test/tuning of RX modules

FSCTRL, A 0x04C, R 0x55, Test/tuning of synthesizer

FSCAL0, A 0x04E, R 0x24, Test/tuning of synthesizer

FSCAL1, A 0x04F, R 0x29, Test/tuning of VCO

FSCAL2, A 0x050, R 0x20, Test/tuning of VCO

FSCAL3, A 0x051, R 0x2A, Test/tuning of VCO

AGCCTRL0, A 0x052, R 0x5F, Test/tuning of AGC

AGCCTRL1, A 0x053, R 0x0E, Test/tuning of AGC

AGCCTRL2, A 0x054, R 0x00, Test/tuning of LNA

AGCCTRL3, A 0x055, R 0x2E, Test/tuning of AGC and AAF

ADCTEST0, A 0x056, R 0x66, Test/tuning of ADC

ADCTEST1, A 0x057, R 0x0A, Test/tuning of ADC

ADCTEST2, A 0x058, R 0x05, Test/tuning of ADC

MDMTEST0, A 0x05A, R 0x05, Test/tuning of modem

DACTEST0, A 0x05C, R 0x00, Test/tuning of DAC

DACTEST1, A 0x05D, R 0x00, Test/tuning of DAC

ATEST, A 0x05E, R 0x00, Controls analog test mode

DACTEST2, A 0x05F, R 0x00, Test/tuning of DAC

PTEST0, A 0x060, R 0x00, Test/tuning of power down signals

PTEST1, A 0x061, R 0x00, Test/tuning of power down signals

RESERVED, A 0x062, R 0x00, Not currently in use

DPUBIST, A 0x07A, R 0x00, Test/tuning of DPU ROM

ACTBIST, A 0x07C, R 0x00, Test/tuning of ACT ROM

RAMBIST, A 0x07E, R 0x02, Test/tuning of RAM

29 Datasheet Revision History

Literature Number	Release Date	Comments
SWRS068	2007-12-20	Initial release

NOTE: Page and figure numbers refer to the respective document revision.

PACKAGING INFORMATION

Orderable Device	Status (1)	Package Type	Package Drawing	Pins	Package Qty	Eco Plan (2)	Lead/Ball Finish	MSL Peak Temp (3)	Op Temp (°C)	Top-Side Markings (4)	Samples
CC2520RHDR	ACTIVE	VQFN	RHD	28	3000	Green (RoHS & no Sb/Br)	CU NIPDAU	Level-3-260C-168 HR	-40 to 125	CC2520	Samples
CC2520RHDRG4	ACTIVE	VQFN	RHD	28	3000	Green (RoHS & no Sb/Br)	CU NIPDAU	Level-3-260C-168 HR	-40 to 125	CC2520	Samples
CC2520RHDT	ACTIVE	VQFN	RHD	28	250	Green (RoHS & no Sb/Br)	CU NIPDAU	Level-3-260C-168 HR	-40 to 125	CC2520	Samples
CC2520RHDTG4	ACTIVE	VQFN	RHD	28	250	Green (RoHS & no Sb/Br)	CU NIPDAU	Level-3-260C-168 HR	-40 to 125	CC2520	Samples

(1) The marketing status values are defined as follows:
ACTIVE: Product device recommended for new designs.
LIFEBUY: TI has announced that the device will be discontinued, and a lifetime-buy period is in effect.
NRND: Not recommended for new designs. Device is in production to support existing customers, but TI does not recommend using this part in a new design.
PREVIEW: Device has been announced but is not in production. Samples may or may not be available.
OBSOLETE: TI has discontinued the production of the device.

(2) Eco Plan - The planned eco-friendly classification: Pb-Free (RoHS), Pb-Free (RoHS Exempt), or Green (RoHS & no Sb/Br) - please check http://www.ti.com/productcontent for the latest availability information and additional product content details.
TBD: The Pb-Free/Green conversion plan has not been defined.
Pb-Free (RoHS): TI's terms "Lead-Free" or "Pb-Free" mean semiconductor products that are compatible with the current RoHS requirements for all 6 substances, including the requirement that lead not exceed 0.1% by weight in homogeneous materials. Where designed to be soldered at high temperatures, TI Pb-Free products are suitable for use in specified lead-free processes.
Pb-Free (RoHS Exempt): This component has a RoHS exemption for either 1) lead-based flip-chip solder bumps used between the die and package, or 2) lead-based die adhesive used between the die and leadframe. The component is otherwise considered Pb-Free (RoHS compatible) as defined above.
Green (RoHS & no Sb/Br): TI defines "Green" to mean Pb-Free (RoHS compatible), and free of Bromine (Br) and Antimony (Sb) based flame retardants (Br or Sb do not exceed 0.1% by weight in homogeneous material)

(3) MSL, Peak Temp. -- The Moisture Sensitivity Level rating according to the JEDEC industry standard classifications, and peak solder temperature.

(4) Only one of markings shown within the brackets will appear on the physical device.

Important Information and Disclaimer: The information provided on this page represents TI's knowledge and belief as of the date that it is provided. TI bases its knowledge and belief on information provided by third parties, and makes no representation or warranty as to the accuracy of such information. Efforts are underway to better integrate information from third parties. TI has taken and continues to take reasonable steps to provide representative and accurate information but may not have conducted destructive testing or chemical analysis on incoming materials and chemicals. TI and TI suppliers consider certain information to be proprietary, and thus CAS numbers and other limited information may not be available for release.

In no event shall TI's liability arising out of such information exceed the total purchase price of the TI part(s) at issue in this document sold by TI to Customer on an annual basis.

TAPE AND REEL INFORMATION

REEL DIMENSIONS

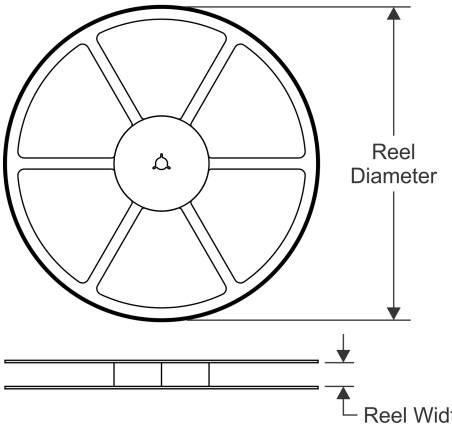

TAPE DIMENSIONS

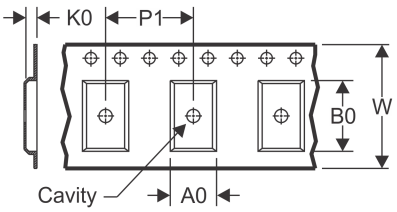

A0	Dimension designed to accommodate the component width
B0	Dimension designed to accommodate the component length
K0	Dimension designed to accommodate the component thickness
W	Overall width of the carrier tape
P1	Pitch between successive cavity centers

QUADRANT ASSIGNMENTS FOR PIN 1 ORIENTATION IN TAPE

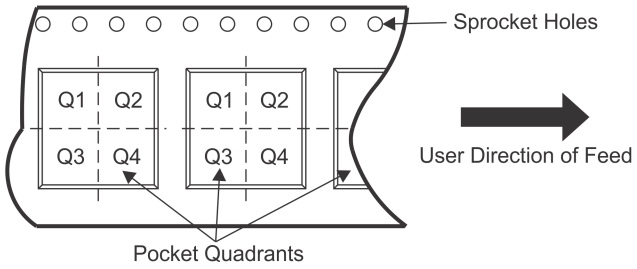

*All dimensions are nominal

Device	Package Type	Package Drawing	Pins	SPQ	Reel Diameter (mm)	Reel Width W1 (mm)	A0 (mm)	B0 (mm)	K0 (mm)	P1 (mm)	W (mm)	Pin1 Quadrant
CC2520RHDR	VQFN	RHD	28	3000	330.0	12.4	5.3	5.3	1.5	8.0	12.0	Q2
CC2520RHDT	VQFN	RHD	28	250	180.0	12.4	5.3	5.3	1.5	8.0	12.0	Q2

TAPE AND REEL BOX DIMENSIONS

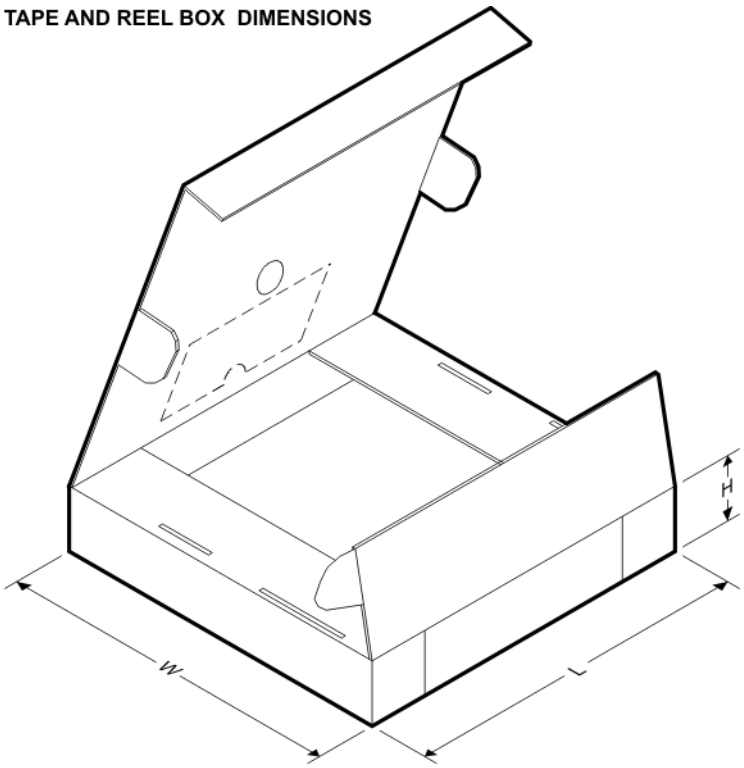

*All dimensions are nominal

Device	Package Type	Package Drawing	Pins	SPQ	Length (mm)	Width (mm)	Height (mm)
CC2520RHDR	VQFN	RHD	28	3000	338.1	338.1	20.6
CC2520RHDT	VQFN	RHD	28	250	210.0	185.0	35.0

RHD (S–PVQFN–N28) PLASTIC QUAD FLATPACK NO–LEAD

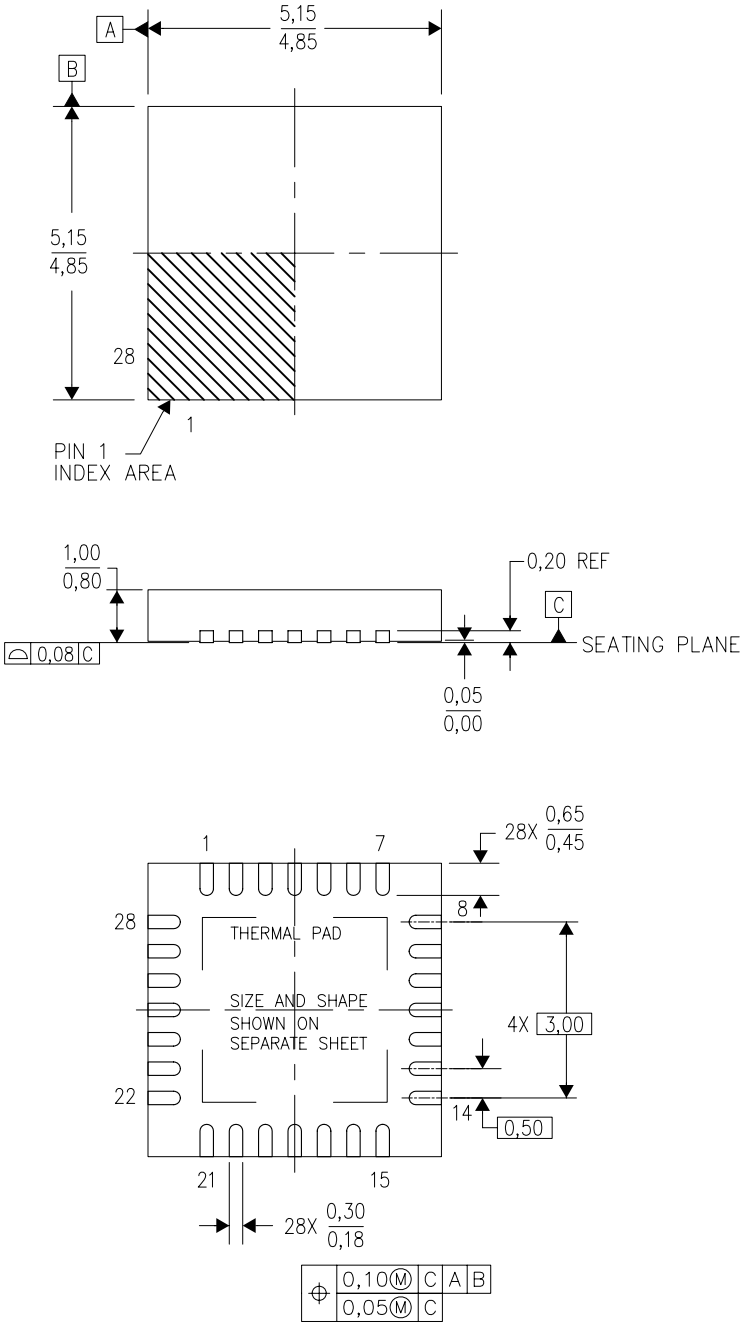

4204400/F 09/11

NOTES:
A. All linear dimensions are in millimeters. Dimensioning and tolerancing per ASME Y14.5M–1994.
B. This drawing is subject to change without notice.
C. QFN (Quad Flatpack No–Lead) Package configuration.
D. The package thermal pad must be soldered to the board for thermal and mechanical performance.
E. See the additional figure in the Product Data Sheet for details regarding the exposed thermal pad features and dimensions.
F. Falls within JEDEC MO–220.

RHD (S–PVQFN–N28) PLASTIC QUAD FLATPACK NO–LEAD

THERMAL INFORMATION

This package incorporates an exposed thermal pad that is designed to be attached directly to an external heatsink. The thermal pad must be soldered directly to the printed circuit board (PCB). After soldering, the PCB can be used as a heatsink. In addition, through the use of thermal vias, the thermal pad can be attached directly to the appropriate copper plane shown in the electrical schematic for the device, or alternatively, can be attached to a special heatsink structure designed into the PCB. This design optimizes the heat transfer from the integrated circuit (IC).

For information on the Quad Flatpack No–Lead (QFN) package and its advantages, refer to Application Report, QFN/SON PCB Attachment, Texas Instruments Literature No. SLUA271. This document is available at www.ti.com.

The exposed thermal pad dimensions for this package are shown in the following illustration.

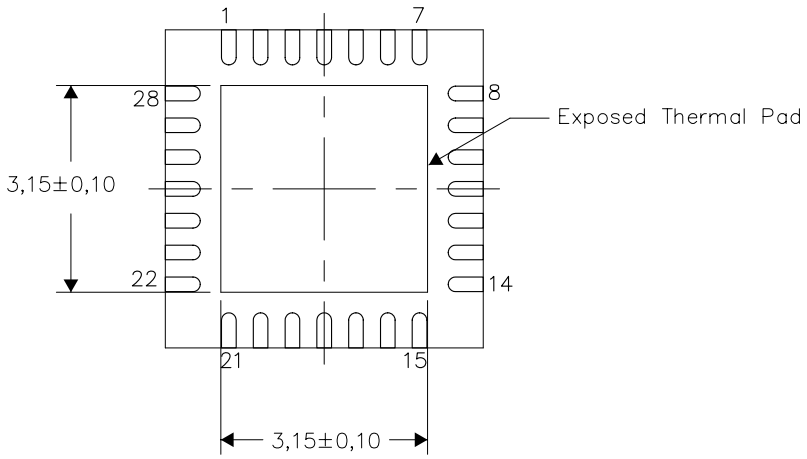

Bottom View

Exposed Thermal Pad Dimensions

4206358–2/I 05/11

NOTE: All linear dimensions are in millimeters

RHD (S–PVQFN–N28) PLASTIC QUAD FLATPACK NO–LEAD

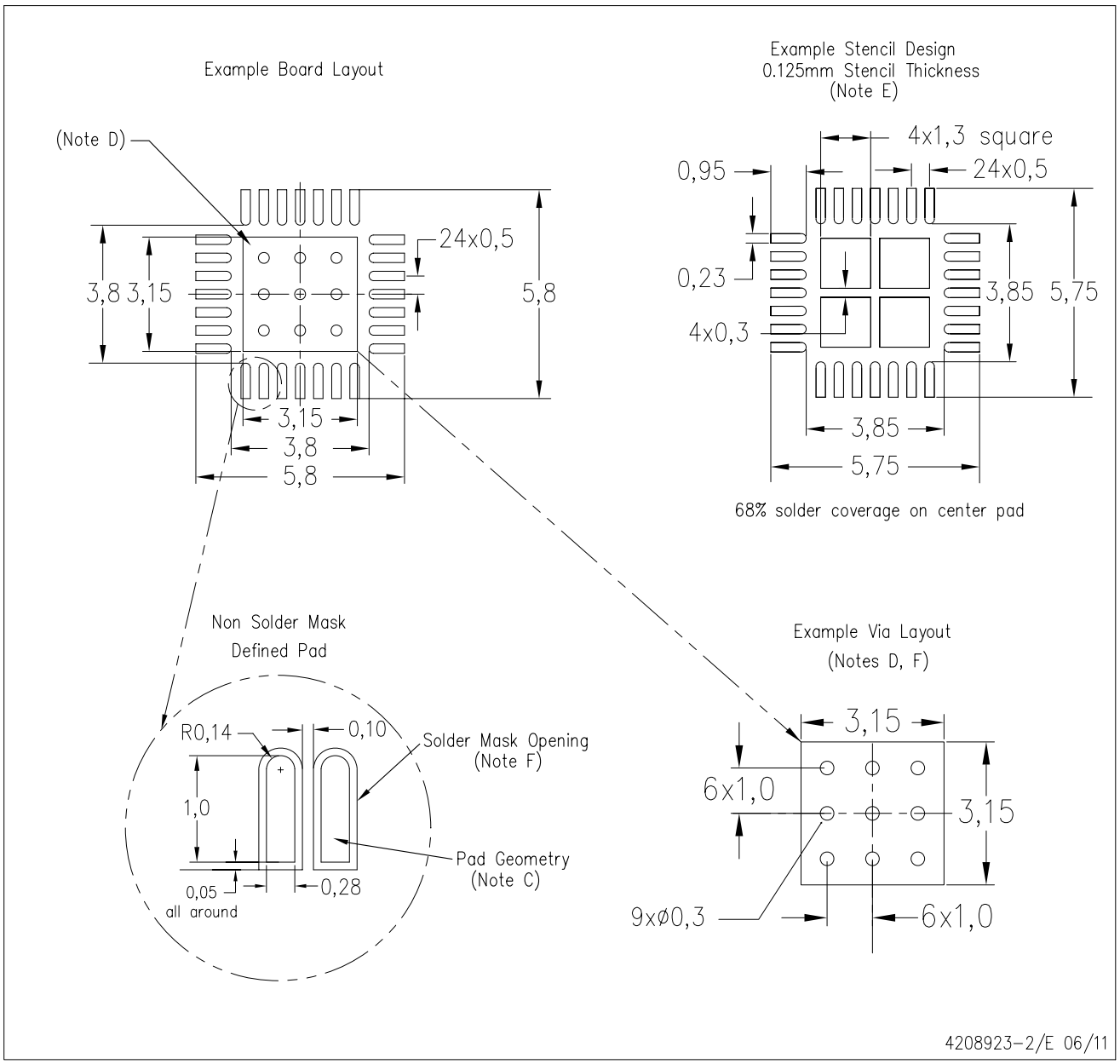

NOTES:
A. All linear dimensions are in millimeters.
B. This drawing is subject to change without notice.
C. Publication IPC–7351 is recommended for alternate designs.
D. This package is designed to be soldered to a thermal pad on the board. Refer to Application Note, Quad Flat–Pack Packages, Texas Instruments Literature No. SLUA271, and also the Product Data Sheets for specific thermal information, via requirements, and recommended board layout. These documents are available at www.ti.com <http://www.ti.com>.
E. Laser cutting apertures with trapezoidal walls and also rounding corners will offer better paste release. Customers should contact their board assembly site for stencil design recommendations. Refer to IPC 7525 for stencil design considerations.
F. Customers should contact their board fabrication site for recommended solder mask tolerances and via tenting recommendations for vias placed in thermal pad.

IMPORTANT NOTICE

Texas Instruments Incorporated and its subsidiaries (TI) reserve the right to make corrections, enhancements, improvements and other changes to its semiconductor products and services per JESD46, latest issue, and to discontinue any product or service per JESD48, latest issue. Buyers should obtain the latest relevant information before placing orders and should verify that such information is current and complete. All semiconductor products (also referred to herein as “components”) are sold subject to TI’s terms and conditions of sale supplied at the time of order acknowledgment.

TI warrants performance of its components to the specifications applicable at the time of sale, in accordance with the warranty in TI’s terms and conditions of sale of semiconductor products. Testing and other quality control techniques are used to the extent TI deems necessary to support this warranty. Except where mandated by applicable law, testing of all parameters of each component is not necessarily performed.

TI assumes no liability for applications assistance or the design of Buyers’ products. Buyers are responsible for their products and applications using TI components. To minimize the risks associated with Buyers’ products and applications, Buyers should provide adequate design and operating safeguards.

TI does not warrant or represent that any license, either express or implied, is granted under any patent right, copyright, mask work right, or other intellectual property right relating to any combination, machine, or process in which TI components or services are used. Information published by TI regarding third-party products or services does not constitute a license to use such products or services or a warranty or endorsement thereof. Use of such information may require a license from a third party under the patents or other intellectual property of the third party, or a license from TI under the patents or other intellectual property of TI.

Reproduction of significant portions of TI information in TI data books or data sheets is permissible only if reproduction is without alteration and is accompanied by all associated warranties, conditions, limitations, and notices. TI is not responsible or liable for such altered documentation. Information of third parties may be subject to additional restrictions.

Resale of TI components or services with statements different from or beyond the parameters stated by TI for that component or service voids all express and any implied warranties for the associated TI component or service and is an unfair and deceptive business practice. TI is not responsible or liable for any such statements.

Buyer acknowledges and agrees that it is solely responsible for compliance with all legal, regulatory and safety-related requirements concerning its products, and any use of TI components in its applications, notwithstanding any applications-related information or support that may be provided by TI. Buyer represents and agrees that it has all the necessary expertise to create and implement safeguards which anticipate dangerous consequences of failures, monitor failures and their consequences, lessen the likelihood of failures that might cause harm and take appropriate remedial actions. Buyer will fully indemnify TI and its representatives against any damages arising out of the use of any TI components in safety-critical applications.

In some cases, TI components may be promoted specifically to facilitate safety-related applications. With such components, TI’s goal is to help enable customers to design and create their own end-product solutions that meet applicable functional safety standards and requirements. Nonetheless, such components are subject to these terms.

No TI components are authorized for use in FDA Class III (or similar life-critical medical equipment) unless authorized officers of the parties have executed a special agreement specifically governing such use.

Only those TI components which TI has specifically designated as military grade or “enhanced plastic” are designed and intended for use in military/aerospace applications or environments. Buyer acknowledges and agrees that any military or aerospace use of TI components which have ***not*** been so designated is solely at the Buyer's risk, and that Buyer is solely responsible for compliance with all legal and regulatory requirements in connection with such use.

TI has specifically designated certain components as meeting ISO/TS16949 requirements, mainly for automotive use. In any case of use of non-designated products, TI will not be responsible for any failure to meet ISO/TS16949.

Products		**Applications**	
Audio	www.ti.com/audio	Automotive and Transportation	www.ti.com/automotive
Amplifiers	amplifier.ti.com	Communications and Telecom	www.ti.com/communications
Data Converters	dataconverter.ti.com	Computers and Peripherals	www.ti.com/computers
DLP® Products	www.dlp.com	Consumer Electronics	www.ti.com/consumer-apps
DSP	dsp.ti.com	Energy and Lighting	www.ti.com/energy
Clocks and Timers	www.ti.com/clocks	Industrial	www.ti.com/industrial
Interface	interface.ti.com	Medical	www.ti.com/medical
Logic	logic.ti.com	Security	www.ti.com/security
Power Mgmt	power.ti.com	Space, Avionics and Defense	www.ti.com/space-avionics-defense
Microcontrollers	microcontroller.ti.com	Video and Imaging	www.ti.com/video
RFID	www.ti-rfid.com		
OMAP Applications Processors	www.ti.com/omap	**TI E2E Community**	e2e.ti.com
Wireless Connectivity	www.ti.com/wirelessconnectivity		

Mailing Address: Texas Instruments, Post Office Box 655303, Dallas, Texas 75265
Copyright © 2013, Texas Instruments Incorporated

Mouser Electronics

Authorized Distributor

Click to View Pricing, Inventory, Delivery & Lifecycle Information:

Texas Instruments:

CC2520RHDRG4 CC2520RHDR CC2520RHDT CC2520RHDTG4 HPA00399RHDR